CITY OF HAYS COMMISSION MEETING
THURSDAY, MARCH 24, 2016 – 6:30 P.M.
AGENDA

1. Call to order by Chairperson.

2. **MINUTES:** Consider approval of the minutes from the regular meeting held on March 10, 2016. (PAGE 1)

3. **FINANCIAL STATEMENT:** Consider accepting the Financial Statement for the month of February, 2016. (PAGE 7)

4. **CITIZEN COMMENTS:** (non-agenda items).

5. **CONSENT AGENDA:** (Items to be approved by the Commission in one motion, unless objections are raised).
   A. Mayoral Appointments for Approval: CARE Council and Sister Cities Advisory Board (PAGE 81)
   B. Mayoral Appointment Recommendations: Building Trades Board, Hays Area Board of Zoning Appeals, and Hays Area Planning Commission (PAGE 85)

UNFINISHED BUSINESS

(No business to review)

NEW BUSINESS

6. **USD 489 SALES TAX PETITION:** Consider approving Resolution No. 2016-002 calling for a special sales tax election for USD 489 on June 7, 2016. (PAGE 95)

7. **AIRPORT SNOW BROOM ACQUSITION:** Consider authorizing City staff to submit an application for federal assistance for the purchase of a snow broom for the Hays Regional Airport and accepting the low bid from M-B Companies, Inc., contingent upon an FAA grant offer, with the cost to be funded from the New Equipment Reserve Fund. (PAGE 129)

8. **REPORT OF THE CITY MANAGER**

9. **COMMISSION INQUIRIES AND COMMENTS**

10. **EXECUTIVE SESSION (IF REQUIRED)**

11. **ADJOURNMENT**

ANY PERSON WITH A DISABILITY NEEDING SPECIAL ACCOMMODATIONS TO ATTEND THIS MEETING SHOULD CONTACT THE CITY MANAGER'S OFFICE 48 HOURS PRIOR TO THE SCHEDULED MEETING TIME. EVERY ATTEMPT WILL BE MADE TO ACCOMMODATE ANY REQUESTS FOR ASSISTANCE.

MINUTES OF A MEETING
OF THE GOVERNING BODY OF
THE CITY OF HAYS, KANSAS
HELD ON MARCH 10, 2016

1. CALL TO ORDER BY CHAIRMAN: The Governing Body of the City of Hays, Kansas met in regular session on Thursday, March 10, 2016 at 6:30 p.m.

Roll Call: Present: Eber Phelps
Shaun Musil
James Meier
Lance Jones
Absent: Henry Schwaller IV

Chairperson Phelps declared that a quorum was present and called the meeting to order.

2. MINUTES: There were no corrections or additions to the minutes of the regular session held on February 11, 2016; the minutes stand approved as presented.

3. KDOT/KCA PARTNERING AWARD FOR 41ST STREET: Alan Moore of APAC and Kevin Zimmer of KDOT presented the KDOT/KCA Partnering Award to John Braun, Assistant Public Works Director, for the 41st Street Project. Mr. Moore stated he wanted to recognize that they have a wonderful working relationship with the City of Hays and looks forward to working with them in the future.

4. FINANCIAL STATEMENT: Finance Director, Kim Rupp, reviewed the financial summaries of the revenue and expenditure activities of the City of Hays for the month ended January 31, 2016. Month-to-date general fund sales tax collections were at $588,288 which is a decrease of $35,828 as compared to last year. Year-to-date general fund collections are down 5.74%.

The Finance/City Clerk's Office invested $8,000,000 of maturing or renewing certificates with a weighted average interest rate of .65%. The portfolio of certificates of deposit on January 31, 2016 totaled $57,150,000 with a

weighted average interest rate of .41%. The total balance of the Money Market account on January 31, 2016 was $1,000,000 with a current yield of .20%. Total investments are up $900,000 when compared to this time last year.

Shaun Musil moved, Lance Jones seconded, that the Financial Statement for the month of January, 2016, be approved.

Vote: Ayes: Eber Phelps
Shaun Musil
James Meier
Lance Jones

5. CITIZEN COMMENTS: Guy Windholz, representing the Ellis County Courthouse Preservation Committee, updated the Commissioners on repairs they are proposing to the exterior of the Courthouse that was built in 1942. He thanked the Commission for the in-kind services the Public Works Department provided in repairing the curb, sidewalks, and parking stalls in front of the Courthouse. He presented some photos of the repairs as they were being made and thanked Greg Sund, Public Works Director, and his staff for the assistance.

6. CONSENT AGENDA: A. Chairperson Phelps presented the following proposed mayoral appointments at the February 11, 2016 City Commission meeting and are now being presented for approval.

Sister Cities Advisory Board

Ann Leiker – three-year term to expire January 1, 2019 (3rd term)

Dawne Leiker – three-year term to expire January 1, 2019 (2nd term)

Max Maximov – three-year term to expire January 1, 2019 (2nd term)

Mehran Shahidi – three-year term to expire January 1, 2019 (3rd term)

B. The following proposed mayoral appointments will be presented for approval at the March 24, 2016 City Commission meeting:

CARE Council

Holly Haynes – two-year term to expire March 1, 2018 (1st term)

Sister Cities Advisory Board

Heather Musil – unexpired term to expire January 1, 2018 (1st term)

James Meier moved, Lance Jones seconded, to approve the consent agenda as presented.

Vote: Ayes: Eber Phelps
Shaun Musil
James Meier
Lance Jones

NEW BUSINES

7. I-70 MONUMENT SIGNS PROJECT: The 2007 Wayfinding Master Plan was the basis for Wayfinding Signs being installed in phases throughout the City. One part of that Master Plan that has yet to be completed are monument signs along I-70. The 2014 and 2015 budgets included a total of $90,000 for two signs (one east bound and one west bound). In January 2015, staff solicited proposals for the construction of monument signs, but the only valid proposal far exceeded the funding available. Subsequently, staff refined the RFP and recently solicited new proposals. The new RFP used the same budgetary figure of $90,000. The City indicated that any design must be properly sized and placed, to stand out and be highly visible to motorists traveling at highway speeds on I-70.

City staff recommended accepting the low bid of $48,300 from Tobin Rupe Stoneworks to design and construct two 18’ X 10’ flint hills limestone monument signs along I-70 east and west of Hays.

At the March 3, 2016 work session, Commissioners discussed different wordage and fonts to be inscribed on the signs to make them more appealing and noticeable to travelers.

Mr. Rekoske presented 16 designs for the Commissioners consideration. Local artist Scott Gross provided a number of designs.

Eber Phelps moved, James Meier seconded, to accept design number 15.

Commissioner Jones stated he preferred option number two.

Eber Phelps amended his original motion, and James Meier seconded the amended motion, to accept the low bid of $48,300 from Tobin Rupe Stoneworks for the I-70 Monument Signs Project to be funded out of Capital Projects using option number 15.

Vote: Ayes: Eber Phelps
Shaun Musil
James Meier
No: Lance Jones

8. 2016 STREET MAINTENANCE PROGRAM – AWARD OF BIDS: Bids have been received for 2016 Street Maintenance Projects. Those projects include chip seal, seal coat, preservative seal, micro-surfacing, polypatch, mill and overlay, curb and brick repair, diamond grinding, and concrete patching. The amount of work proposed totals $1,794,575.70 awarded to seven different contractors. The work would be accomplished at various locations and various times throughout the year.

John Braun, Assistant Public Works Director, explained that awarding the $1,794,575.70, listed above and reserving $50,000 for the pavement condition assessment, $40,000 for in-house work, and $40,000 for the sidewalk rebate program and other sidewalk improvements will leave $632,661.30 remaining from the $2,557,237 budgeted. This will require the $1,122,237 budgeted for projects in Special Highway plus $802,338.70 from Commission Capital Reserve as shown below in tabular form.

Funding Summary

Bid Projects	$1,794,575.70
Pavement Assessment	$50,000.00
Sidewalk	$40,000.00
In-house	$40,000.00
Total Costs	**$1,924,575.70**
Special Highway *	$1,122,237.00
Capital Reserve	$802,338.70
Total Funding	**$1,924,575.70**

This still leaves $50,000 in Special Highway Contingency for unforeseen or overruns.

James Meier moved, Shaun Musil seconded, to authorize the City Manager to enter contracts for construction as follows, all to be funded out of Special Highway and Commission Capital Reserve:

- Circle C Paving in the amount of $180,251.68 for seal coat;
- Proseal in the amount of $50,090.82 for the preservative seal;
- Intermountain Slurry Seal in the amount of $410,396.00 for micro-surfacing;
- Stripe & Seal in the amount of $43,470.00 for polypatch;
- APAC in the amount of $757,761.00 for mill and overlay;
- J Corp in the amount of $96,995.00 for curb and brick repair;
- APAC in the amount of $164,603.20 for diamond grinding;
- Sweeney Pavement Maintenance in the amount of $91,008.00 for concrete patch.

Vote: Ayes: Eber Phelps
Shaun Musil
James Meier
Lance Jones

9. REPORT OF THE CITY MANAGER: The City Manager had no additional items to report on.

10 COMMISSION INQUIRIES AND COMMENTS: Chairperson Phelps thanked APAC for their rapid response to assist in the tragic trench collapse on Main Street last week. He mentioned the strong partnering and cooperation between the Highway Patrol, Sherriff's Department, Emergency Management, Hays Police and Fire Departments, Fire Departments from surrounding communities, and APAC.

Commissioner Jones also thanked everyone that assisted in that tragic event and recognized how the community came together to support each other.

Commissioner Meier mentioned that the Essential Air Service Contract is coming up and shared with the Commissioners information he found as he

compared the air service provided at the City of Hays Airport with other cities of similar size. He mentioned that we are very fortunate to have the service that Sky West has provided. He encouraged the community to use the Hays Airport to increase our number of boardings.

Commissioner Musil commented that citizens have mentioned to him that the Commission is not behind the downtown hotel project. He stated a concept was presented, but a formal proposal has not been presented to the Commission.

Chairperson Phelps reminded the Commissioners of the opening ceremony for the Special Olympics Thursday, March 17th.

The meeting was adjourned at 7:36 p.m.

Submitted by: _____

Brenda Kitchen – City Clerk

City of Hays
Finance Department

Memo

DATE: March 16, 2016

TO: Toby Dougherty, City Manager

CC: Jacob Wood, Asst City Manager

FROM: Kim Rupp, Finance Director

RE: February 2016 Monthly Financial

The attached report contains the financial summaries of the revenue and expenditure activities of the City of Hays for the month ended February 29, 2016.

Period to Date Financial Performance

Revenues in February totaled $1,942,033 a decrease of $372,188 compared to the same period as last year.

- Notable areas of increased revenue compared to February 2015
    - You will notice water sales tax is about twice what it should be. We mentioned last month about the posting error. What you see this month is the adjustment and the correction going forward.
    - As anticipated, the warmer weather has made golf course revenue surge. YTD it is up $45,675 over this same time last year.
    - And following suit, golf course improvement revenue, which is trail fees is also up. YTD that revenue is ahead of last year by $8500.
    - Business and residential water consumption for February were down a total of -3.33%. However combined water revenue was up $32,253 or 8.7% and conservation revenue was up 22.95% due in large part to the new rate structures that are now in place. Sewer revenue was up $51,525 or 32.6%. YTD total water consumption is down -4.07% with total YTD revenue up 7.66%.
- Notable areas of revenue decrease compared to February 2015
    - Airport improvement revenues fell $373,000 as compared to this time last year simply due to project reimbursements from the FAA.

- For the month, franchise fees were down $37,000 and YTD they are off $10,500.

Expenditures in February totaled $2,530,078 which is an increase of $253,105 as compared to 2015.

- Notable areas of increased expenditures compared to February 2015
  - Other contractual for the IT Dept was up $38,000 due to the timing of payment for annual software contracts.
  - Other contractual for the Parks Dept was also up $8700. This is in relation to the concession area upgrades that are ongoing. This project is mostly supported by private donations.
  - General supplies and materials rose $19,354 for the public works service division. This was for crack sealant product in preparation for scheduled in-house street maintenance.
  - As we mentioned last month, the water and sewer funds are now split. Comparing total expenditures between the old and new funds we see that they are up about $84,000 when compared to this time last year
- Notable areas of decreased expenditures compared to February 2015
  - Fleet maintenance continues its drop, down $11,350 as compared to this time last year due mostly to the lower fuel prices.

MTD general fund sales tax collections were at $696,134 which is a decrease of $39,251 as compared to last year. YTD general fund collections are down -5.52%.

The report of quarter to date (QTD) sales tax collections by industry classification was up $14,877 or just .76%. These top ten now represent 72.8% of the total QTD sales tax distribution.

The Finance/City Clerk's office invested $3,000,000 of maturing or renewing certificates with a weighted average interest rate of .59%. The portfolio of certificates of deposit on February 29, 2016 totaled $55,900,000 with a weighted average interest rate of .42%. The total balance of the Money Market account on February 29, 2016 was $1,000,000 with a current yield of .20%. Total investments are up $1,150,000 when compared to this time last year.

FINANCIAL STATEMENT
CITY OF HAYS, KANSAS

This Document is for Internal Use and Represents Un-audited Figures

As of February 29, 2016

CASH BALANCE

Total Cash in All Funds	$57,777,811.71

STATEMENT OF CREDITS

Checking Accounts with Banks	$876,311.71
Money Market Accounts	$1,000,000.00
Investments	$55,900,000.00
Cash in Office	$1,500.00
TOTAL	$57,777,811.71

STATEMENT OF CURRENT OBLIGATIONS

General Obligation Bonds	$11,940,000.00
Temporary Notes	$0.00
State Revolving Loan Fund	$0.00
Revenue Bonds	$3,100,000.00
Lease Purchase Agreements	$0.00
	$15,040,000.00

G:\Excel\Financial St.xls

CITY OF HAYS
INVESTMENTS AS OF
2/29/2016

Commerce Bank CD #	Certificates of Deposit	Date Issued	Maturity Date	Interest Rate	Interest at Maturity
099	2,200,000.00	1/30/2015	3/4/2016	0.19%	4,449.12
633	2,000,000.00	9/4/2015	9/2/2016	0.35%	6,980.82
711	2,500,000.00	10/2/2015	10/14/2016	0.41%	10,550.34
784	3,000,000.00	10/30/2015	11/10/2016	0.41%	12,626.92
860	2,000,000.00	12/2/2015	12/23/2016	0.39%	8,217.12
911	1,300,000.00	12/30/2015	1/20/2017	0.62%	8,511.35
939	1,000,000.00	1/8/2016	2/3/2017	0.64%	6,846.58
973	3,000,000.00	1/22/2016	2/17/2017	0.66%	21,184.11
974	3,000,000.00	1/22/2016	3/3/2017	0.66%	21,940.68
975	1,000,000.00	1/22/2016	3/17/2017	0.66%	7,566.75
997	1,000,000.00	1/29/2016	3/31/2017	0.61%	7,106.92
023	1,500,000.00	2/6/2016	4/14/2017	0.63%	11,121.58
062	1,500,000.00	2/26/2016	4/28/2017	0.55%	9,563.63
Sunflower Bank CD #	**Certificates of Deposit**				
Equity Bank CD #	**Certificates of Deposit**				
205	500,000.00	2/27/2015	3/18/2016	0.20%	1,060.07
232	1,300,000.00	3/6/2015	4/1/2016	0.29%	4,034.92
250	1,000,000.00	3/20/2015	4/15/2016	0.29%	3,125.26
268	3,000,000.00	4/3/2015	4/29/2016	0.28%	9,118.03
376	1,000,000.00	6/1/2015	5/30/2016	0.35%	3,480.44
286	3,300,000.00	4/17/2015	5/31/2016	0.29%	10,712.79
457	2,000,000.00	6/8/2015	6/10/2016	0.33%	6,654.25
520	3,000,000.00	6/12/2015	6/24/2016	0.35%	10,905.04
673	1,200,000.00	6/30/2015	7/8/2016	0.33%	4,045.35
763	1,000,000.00	7/10/2015	7/22/2016	0.33%	3,427.89
42	3,000,000.00	8/14/2015	8/19/2016	0.34%	10,337.18
889	1,200,000.00	7/24/2015	8/29/2016	0.33%	4,711.99
159	1,000,000.00	9/11/2015	9/16/2016	0.43%	4,391.01
258	2,500,000.00	9/18/2015	9/30/2016	0.46%	11,857.81
438	1,400,000.00	10/16/2015	10/28/2016	0.40%	5,798.00
510	1,000,000.00	11/6/2015	11/25/2016	0.47%	4,946.99
519	1,500,000.00	11/13/2015	12/9/2016	0.54%	8,715.29
Astra Bank CD #	**Certificates of Deposit**				
322	2,000,000.00	12/16/2015	1/6/2017	0.41%	8,694.25
Emprise Bank CD#	**Certificates of Deposit**				
Bank of Hays CD#	**Certificates of Deposit**				
	55,900,000.00				**252,682.48**

Astra Bank		
MMA		0.03%
Commerce Bank		
MMA	**1,000,000.00**	0.20%

SALES TAX RECEIPTS
City of Hays
General Fund 1.25%

	2012 actual	2013 actual	2014 actual	2015 actual	2016 actual	Change from 2015	YTD % Change from 2015
January	$611,353	$630,469	$591,886	$ 624,116	$ 588,288	($35,828)	**-5.74%**
February	$702,298	$687,316	$693,745	$ 735,385	$ 696,134	($39,251)	**-5.52%**
March	$563,583	$561,055	$555,681	$ 566,182	$ -		
April	$509,945	$523,623	$519,570	$ 551,785	$ -		
May	$611,234	$591,279	$597,391	$ 600,238	$ -		
June	$608,325	$567,547	$609,416	$ 623,166	$ -		
July	$621,448	$679,311	$649,718	$ 635,949	$ -		
August	$671,019	$651,955	$617,003	$ 642,316	$ -		
September	$572,295	$611,782	$647,126	$ 644,750	$ -		
October	$648,340	$650,165	$643,573	$ 595,156	$ -		
November	$638,490	$553,637	$652,440	$ 591,684	$ -		
December	$555,204	$594,061	$615,074	$ 622,376	$ -		
TOTALS	$7,313,534	$7,302,200	$7,392,623	$7,433,103	$1,284,422	($75,079)	
	5.09%	-0.15%	1.24%	0.55%			

Total Inc/dec compared to previous year

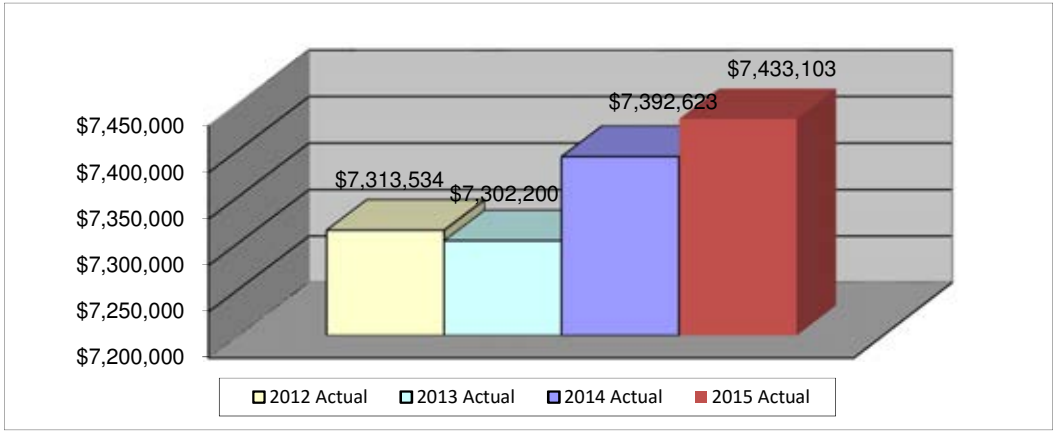

2014 - 2015 - 2016	
6 month running avg	
January	-3.02%
February	-4.58%
March	
April	
May	
June	
July	
August	
September	
October	
November	
December	

**General Fund revenues provide funding for City services including police, fire, street, parks, swimming pool and golf course. It also provides funding to outside agencies such as Economic Development, Downtown Hays Development, United Way CARE Council and Fort Hays State Scholarships.

Sales Tax Collections by Industry Classification - Top Ten QTD 2015-2016 December, January, February					
	2014/15	2015/16	$$ inc/dec	% inc/dec	% of 2015 Total
452 General Merchandise Stores	$533,931	$510,832	($23,099)	-4.33%	18.79%
441 Motor Vehicle and Parts Dealers	$381,495	$376,619	($4,876)	-1.28%	13.85%
722 Food Services and Drinking Places	$246,704	$244,906	($1,798)	-0.73%	9.01%
444 Building Material and Garden Supply	$198,585	$193,322	($5,263)	-2.65%	7.11%
445 Food and Beverage	$215,200	$217,719	$2,519	1.17%	8.01%
517 Telecommunications	$74,290	$107,270	$32,980	44.39%	3.95%
448 Clothing and Clothing Accessories	$116,014	$104,159	($11,855)	-10.22%	3.83%
423 Merchant Wholesalers, Durable Goods	$86,465	$107,644	$21,179	24.49%	3.96%
721 Accommodation	$48,914	$52,774	$3,860	7.89%	1.94%
451 Sporting Goods, Hobby, Book & Music	$63,390	$64,620	$1,230	1.94%	2.38%
	$1,964,988	$1,979,865	$14,877	0.76%	72.83%

MONTHLY STATEMENT OF CITY TREASURER
2/1/2016 THROUGH 2/29/2016

FUND	BALANCE 2/1/2016	RECEIPTS	DISBURSEMENTS	BALANCE 2/29/2016
Cash Drawer	$1,500.00			$1,500.00
General	$4,462,244.60	828,974.68	666,805.90	$4,624,413.38
Petty Cash	$1,000.00			$1,000.00
Reserve Budget Stabilization	$3,221,180.75			$3,221,180.75
Library	$833,580.40	0.00	733,837.85	$99,742.55
Airport	$252,016.97	9,260.18	16,359.33	$244,917.82
Public Safety Equipment	$338,779.25	0.00	7,567.17	$331,212.08
Employee Benefit Contribution	$1,723,516.87	8,277.33	292,965.85	$1,438,828.35
Special Highway	$396,316.53	0.00	527.50	$395,789.03
Special Park & Recreation	$273,846.54	0.00	58,113.94	$215,732.60
Special Alcohol Program	$49,334.46	0.00	15,000.00	$34,334.46
Convention & Tourism	$935,760.14	3,049.45	29,544.73	$909,264.86
New Equipment Reserve	$4,077,733.88	603.57	1,480.00	$4,076,857.45
Grants	$0.00			$0.00
Library Employee Benefit	$127,682.96	0.00	112,801.77	$14,881.19
Golf Course Improvement	$70,538.63	3,500.00	(11,453.76)	$85,492.39
Park Development - Green Space	$5,026.93			$5,026.93
DOJ Program	$1,210.51			$1,210.51
Sports Complex	$1,945,335.05			$1,945,335.05
Stormwater Management	$174,138.14	0.00	(54,761.84)	$228,899.98
Parks Improvement Fund	$55,833.01	6,000.00	14,116.15	$47,716.86
Ellis Co. Sales Tax	$0.00	157,746.45	157,746.45	$0.00
City Capital Reserve	$3,401,144.41	603.57	380.00	$3,401,367.98
Capital Projects	($522,146.38)	222,324.00	274,791.71	($574,614.09)
Airport Improvement	$253,030.66	2,889.18	1,163.09	$254,756.75
Bond & Interest	$936,397.81	0.00	186,907.92	$749,489.89
TDD Sales Tax	$17,145.67	14,518.22	17,145.67	$14,518.22
Home Depot Econ Dev Bds	$235,295.06	9,679.00	41,902.50	$203,071.56

Data date & time 3/9/2016 3:37:57PM

FUND	BALANCE 2/1/2016	RECEIPTS	DISBURSEMENTS	BALANCE 2/29/2016
Home Depot Econ Dev Bds (Cash Restr.)				$24,608.90
48th/Roth Ave. - CID	$31,027.34	6,010.38	26,141.40	$10,896.32
The Mall CID	$126,979.92	26,485.93	0.00	$153,465.85
	$0.00			$0.00
Restricted Cash - 2009 A Bonds	$65,352.00			$65,352.00
Sales Tax (Cash Reserve)	$27,076,980.89			$27,076,980.89
Water & Sewer (Capital Reserve)	$1,462,318.82			$1,462,318.82
Water & Sewer(Reserve 2009A)	$421,162.02	0.00	60,547.50	$360,614.52
Water Fund	$4,728,619.80	721,224.69	772,389.73	$4,677,454.76
Solid Waste Fund	$495,905.55	2,489.88	(54,260.26)	$552,655.69
Solid Waste Reserve	$523,880.56			$523,880.56
	$0.00			$0.00
Waste Water Fund	$187,314.01	879.88	(144,874.78)	$333,068.67
Water Conserv / WA SLS TX	($18,850.55)	285,951.23	(236,292.74)	$503,393.42
Water Sales Tax Reserve	($7,395.35)	1,408.52	60,652.70	($66,639.53)
Fire Insurance Trust	$0.00			$0.00
	$0.00			$0.00
Municipal Court Agency Fund	$105,270.85	93.94	(22,469.50)	$127,834.29
	$58,490,617.61	**$2,311,970.08**	**$3,024,775.98**	**$57,777,811.71**

Data date & time 3/9/2016 3:37:57PM

City of Hays Revenues

Month of February 2016

	Budgeted 2016	Collections Current Mo.	Collections To Date	Balance
General				
CULTURE & RECREATION REVENUES				
Total Revenues	$438,390.00	$98,540.55	$132,024.67	($306,365.33)
GENERAL GOVERNMENT REVENUES				
Total Revenues	$11,464,783.00	$821,041.38	$1,567,826.85	($9,896,956.15)
PUBLIC SAFETY REVENUES				
Total Revenues	$613,000.00	$44,316.33	$88,304.83	($524,695.17)
PUBLIC WORKS REVENUES				
Total Revenues	$10,300.00	$2,600.00	$2,850.00	($7,450.00)
Library				
LIBRARY FUND REVENUES				
Total Revenues	$1,295,143.00	$0.00	$733,837.85	($561,305.15)
Airport				
AIRPORT FUND REVENUES				
Total Revenues	$357,269.00	$9,260.18	$145,353.58	($211,915.42)
Public Safety Equipment				
PUBLIC SAFETY EQUIP REVENUES				
Total Revenues	$458,208.00	$0.00	$259,588.51	($198,619.49)
Employee Benefit				
EMPLOYEE BENEFIT REVENUES				
Total Revenues	$3,580,598.00	$3,067.71	$1,557,679.84	($2,022,918.16)
Special Highway				
SPECIAL HIGHWAY REVENUES				
Total Revenues	$1,089,920.00	$0.00	$149,657.59	($940,262.41)
Special Park & Rec				
SPECIAL PRK & REC REVENUES				
Total Revenues	$131,390.00	$0.00	$0.00	($131,390.00)
Special Alcohol Fund				
SPECIAL ALCOHOL FUND REVENUES				
Total Revenues	$131,390.00	$0.00	$0.00	($131,390.00)
Convention & Visitors Bureau				
CONVENTION & VISITOR'S REVENUE				
Total Revenues	$832,058.00	$3,049.45	$240,461.34	($591,596.66)
New Equipment Reserve				
NEW EQUIP RESERVE REVENUES				
Total Revenues	$0.00	$603.57	$1,222.06	$1,222.06
Library Employee Benefit				
LIBRARY EMP. BENEFIT REVENUES				
Total Revenues	$198,361.00	$0.00	$112,801.77	($85,559.23)
Risk Management				
RISK MANAGEMENT REVENUES				
Total Revenues	$0.00	$0.00	$0.00	$0.00
Golf Course Improvement				
GOLF COURSE IMPR. FUND REVENUE				
Total Revenues	$0.00	$14,953.76	$18,213.14	$18,213.14
Park Development				
PARK DEVELOPMENT FUND-REVENUE				
Total Revenues	$0.00	$0.00	$0.00	$0.00
DOJ Program				
DOJ PROGRAM-REVENUES				
Total Revenues	$0.00	$0.00	$0.00	$0.00

Period (Month) = 2.00

	Budgeted 2016	Collections Current Mo.	Collections To Date	Balance
Sports Complex				
SPORTS COMPLEX-REVENUES				
Total Revenues	$0.00	$0.00	$16,000.00	$16,000.00
STORMWATER MANAGEMENT REVENUES				
Total Revenues	$789,140.00	$59,467.49	$204,211.28	($584,928.72)
PARKS IMPROVEMENT FUND-REVENUE				
Total Revenues	$0.00	$0.00	$0.00	$0.00
ELLIS CO. SALES TAX-REVENUES				
Total Revenues	$0.00	$157,746.45	$291,971.38	$291,971.38
City Commission Capital Reserve				
CITY COMMISSION CPTL RESRV REV				
Total Revenues	$0.00	$603.57	$1,038.52	$1,038.52
Airport Improvement				
AIRPORT IMPR.FUND REVENUES				
Total Revenues	$0.00	$2,889.18	$93,004.80	$93,004.80
Bond & Interest				
BOND & INTEREST REVENUES				
Total Revenues	$1,322,421.00	$0.00	$755,357.35	($567,063.65)
TDD Sales Tax				
TDD SLS TAX REVENUES				
Total Revenues	($56,562.92)	$14,518.22	$31,663.89	$88,226.81
Home Depot Economic Dev Bonds				
H DEPOT-ECON DEV BND-REVENUES				
Total Revenues	$219,317.00	$9,679.00	$67,128.56	($152,188.44)
48th/Roth Ave. - CID				
48TH/ROTH AVE CID-REVENUES				
Total Revenues	$0.00	$6,010.38	$13,070.24	$13,070.24
Mall CID				
THE MALL CID-REVENUES				
Total Revenues	$0.00	$26,485.93	$44,004.82	$44,004.82
Water Fund				
WATER FUND REVENUES				
Total Revenues	$3,406,299.00	($25,649.11)	$523,733.01	($2,882,565.99)
Solid Waste				
SOLID WASTE FUND REVENUES				
Total Revenues	$1,301,950.00	$109,559.82	$356,423.79	($945,526.21)
Waste Water Fund				
WASTE WATER FUND REVENUES				
Total Revenues	$2,622,168.00	$212,258.63	$515,715.02	($2,106,452.98)
Water Conservation				
WA CONSERV REVENUES				
Total Revenues	$3,380,293.00	$530,992.46	$531,122.46	($2,849,170.54)
Water Sales Tax				
WATER SLS TX RESERVE REVENUES				
Total Revenues	$0.00	($2,216.06)	$1,408.52	$1,408.52
Fire Insurance Trust				
FIRE INS TRUST REVENUES				
Total Revenues	$0.00	$0.00	$0.00	$0.00
Grand Totals	**$33,585,835.08**	**$2,099,778.89**	**$8,455,675.67**	**($25,130,159.41)**

Period (Month) = 2.00

City of Hays Expenditures

Month of February 2016

	Budgeted 2016	Expenses Current Mo.	Expenses To Date	Balance
General				
BALLFIELD MAINTENANCE				
Total Expenditures	$38,300.00	$2,847.76	$9,917.03	$28,382.97
BICKLE-SCHMIDT SPORTS COMPLEX				
Total Expenditures	$227,658.00	$6,653.97	$19,421.24	$208,236.76
BUILDINGS & GROUNDS				
Total Expenditures	$503,935.00	$40,831.47	$76,481.13	$427,453.87
CEMETERIES				
Total Expenditures	$17,500.00	$92.99	$667.38	$16,832.62
CITY ATTORNEY				
Total Expenditures	$101,000.00	$28,580.71	$38,435.79	$62,564.21
CITY COMMISSION				
Total Expenditures	$2,173,045.00	$970.86	$1,770.86	$2,171,274.14
CITY MANAGER				
Total Expenditures	$511,593.00	$37,406.82	$91,044.36	$420,548.64
DISPATCH				
Total Expenditures	$573,784.00	$32,596.98	$89,026.15	$484,757.85
ECONOMIC DEVELOPMENT				
Total Expenditures	$229,378.00	$175.00	$114,728.00	$114,650.00
FINANCE/CITY CLERK				
Total Expenditures	$381,011.00	$26,835.96	$63,897.69	$317,113.31
FIRE DEPARTMENT				
Total Expenditures	$1,404,167.00	$103,903.15	$251,486.06	$1,152,680.94
FLEET MAINTENANCE				
Total Expenditures	$801,073.00	$31,587.17	$64,103.43	$736,969.57
GOLF COURSE				
Total Expenditures	$366,618.00	$15,735.26	$42,101.91	$324,516.09
HUMAN RESOURCES				
Total Expenditures	$195,750.00	$12,782.19	$27,757.99	$167,992.01
INFORMATION TECHNOLOGY				
Total Expenditures	$558,022.00	$73,807.86	$137,130.51	$420,891.49
INTERGOVERNMENTAL ACCOUNT				
Total Expenditures	$334,300.00	$5,621.90	$17,415.21	$316,884.79
MUNICIPAL COURT				
Total Expenditures	$163,465.00	$11,600.10	$27,472.29	$135,992.71
P.W.-GENERAL ADMINISTRATION				
Total Expenditures	$293,540.00	$18,551.96	$46,400.29	$247,139.71
PARKS & PLAYGROUNDS				
Total Expenditures	$900,641.00	$70,841.99	$152,583.06	$748,057.94
PLANNING INSPECTION ENFORCEMEN				
Total Expenditures	$426,039.00	$22,961.05	$54,359.92	$371,679.08
POLICE DEPARTMENT				
Total Expenditures	$2,138,223.00	$142,377.60	$363,828.20	$1,774,394.80
PUBLIC WORKS-SERVICE DIVISION				
Total Expenditures	$926,200.00	$72,263.89	$144,510.44	$781,689.56
QUALITY OF LIFE				
Total Expenditures	$0.00	$0.00	$0.00	$0.00
SOCIAL SERVICES				
Total Expenditures	$164,000.00	$0.00	$82,000.00	$82,000.00
SWIMMING POOL				
Total Expenditures	$100,700.00	$5,315.11	$12,713.87	$87,986.13
Library				
LIBRARY FUND EXPENDITURES				
Total Expenditures	$1,343,962.00	$733,837.85	$744,252.38	$599,709.62
Airport				
AIRPORT FUND EXPENDITURES				
Total Expenditures	$423,434.00	$15,221.23	$32,416.74	$391,017.26

Period (Month) = 2.00

	Budgeted 2016	Expenses Current Mo.	Expenses To Date	Balance
Public Safety Equipment				
PUBLIC SAFETY EQUIP.-EXPENDIT				
Total Expenditures	$486,768.00	$7,567.17	$18,464.39	$468,303.61
Employee Benefit				
EMPLOYEE BENEFIT EXPENDITURES				
Total Expenditures	$4,139,740.00	$287,756.23	$1,010,367.30	$3,129,372.70
Special Highway				
SPECIAL HIGHWAY EXPENDITURES				
Total Expenditures	$1,172,237.00	$0.00	$0.00	$1,172,237.00
Special Park & Rec				
SPECIAL PRK & REC EXPENDITURES				
Total Expenditures	$336,915.00	$519.00	$1,169.00	$335,746.00
Special Alcohol Fund				
SPECIAL ALCOHOL FUND EXPENDITU				
Total Expenditures	$206,151.00	$0.00	$30,000.00	$176,151.00
Convention & Visitors Bureau				
CVB EXPENDITURES				
Total Expenditures	$1,340,675.00	$29,544.73	$135,092.14	$1,205,582.86
New Equipment Reserve				
NEW EQUP. RESERVE EXPENDITURES				
Total Expenditures	$0.00	$1,480.00	$99,131.42	($99,131.42)
Library Employee Benefit				
LIBRARY EMP. BENEFIT EXPENDITU				
Total Expenditures	$205,348.00	$112,801.77	$114,403.30	$90,944.70
Risk Management				
RISK MGT. FUND EXPENDITURES				
Total Expenditures	$0.00	$0.00	$0.00	$0.00
Golf Course Improvement				
GOLF COURSE IMPR. EXPENDITURES				
Total Expenditures	$0.00	$0.00	$735.00	($735.00)
Park Development				
PARK DEVELOPMENT EXPENDITURES				
Total Expenditures	$5,027.00	$0.00	$0.00	$5,027.00
DOJ Program				
DOJ-EXPENDITURES				
Total Expenditures	$0.00	$0.00	$0.00	$0.00
Sports Complex				
SPORTS COMPLEX-EXPENDITURES				
Total Expenditures	$0.00	$0.00	$0.00	$0.00
STORMWATER MANAGEMENT EXPENDIT				
Total Expenditures	$861,300.00	$4,705.65	$10,792.82	$850,507.18
PARKS IMPROVEMENT FUND-EXPEND				
Total Expenditures	$0.00	($2,113.46)	($1,870.31)	$1,870.31
ELLIS CO. SALES TAX-EXPENDITUR				
Total Expenditures	$0.00	$157,746.45	$291,971.38	($291,971.38)
City Commission Capital Reserve				
CTY COMMISSION CPTL RSRV EXPEN				
Total Expenditures	$0.00	$380.00	$22,179.92	($22,179.92)
Airport Improvement				
AIRPORT IMPR. FUND EXPENDITURE				
Total Expenditures	$8,443,989.42	$0.00	$8,298.00	$8,435,691.42
Bond & Interest				
BOND & INTEREST EXPENDITURES				
Total Expenditures	$1,377,880.00	$186,907.92	$193,391.43	$1,184,488.57
TDD Sales Tax				
TDD SLS TAX EXPENDITURES				
Total Expenditures	$0.00	$17,145.67	$37,759.99	($37,759.99)

Period (Month) = 2.00

	Budgeted 2016	Expenses Current Mo.	Expenses To Date	Balance
Home Depot Economic Dev Bonds				
H DEPOT ECON DEV BND-EXPENDITU				
Total Expenditures	$213,805.00	$41,902.50	$41,902.50	$171,902.50
48th/Roth Ave. - CID				
48TH/ ROTH AVE CID-EXPENDITURE				
Total Expenditures	$0.00	$26,141.40	$26,141.40	($26,141.40)
Mall CID				
THE MALL CID-EXPENDITURES				
Total Expenditures	$0.00	$0.00	$0.00	$0.00
Water Fund				
DEBT SERVICE				
Total Expenditures	$0.00	$0.00	$0.00	$0.00
DEBT SERVICE - SALES TAX				
Total Expenditures	$0.00	$0.00	$0.00	$0.00
UTILITIES DEPT./WATER CONSERV.				
Total Expenditures	$0.00	$12.69	$12.69	($12.69)
W/S NON-OPERATING EXPENDITURES				
Total Expenditures	$0.00	($1,555.07)	$153.70	($153.70)
WASTEWATER TREATMENT & COLL.				
Total Expenditures	$0.00	$0.00	$0.00	$0.00
WATER FUND EXPENDITURES				
Total Expenditures	$3,602,454.00	$127,371.61	$250,907.62	$3,351,546.38
WATER PRODUCTION & DIST.				
Total Expenditures	$0.00	$65.90	$65.90	($65.90)
Solid Waste				
SOLID WASTE FUND EXPENDITURE				
Total Expenditures	$1,392,364.00	$52,809.68	$95,150.34	$1,297,213.66
Waste Water Fund				
WASTE WATER FUND EXPENDITURES				
Total Expenditures	$2,582,474.00	$66,503.97	$147,015.29	$2,435,458.71
Water Conservation / Water Sales Tax				
WA CONSERV EXPENDITU				
Total Expenditures	$3,380,293.00	$8,748.49	$31,473.51	$3,348,819.49
Water Sales Tax Reserve				
WA SLS TX RESERVE EXPENDITURES				
Total Expenditures	$0.00	$57,028.12	$93,737.59	($93,737.59)
Fire Insurance Trust				
FIRE INS TRUST EXPENDITURES				
Total Expenditures	$0.00	$0.00	$0.00	$0.00
Grand Totals	**$45,044,758.42**	**$2,696,871.25**	**$5,364,368.25**	**$39,680,390.17**

Period (Month) = 2.00

GENERAL FUND

2/29/2016

BALANCE SHEET

ASSETS:		
Cash		4,624,413.38
Petty Cash		1,000.00
Cash Drawer		1,500.00
Reserve-Budget Stabilization		3,221,180.75
Accts. Receivable-Police Court		98,605.17
Accts. Receivable-Misc. Sources		0.00
	TOTAL ASSETS	**7,946,699.30**
LIABILITIES		
Accounts Payable		1,400.00
Control Pay Payable		0.00
Accrued Payroll		228,413.85
Accrued Vacation/PTO		463,090.93
Accrued Sick Leave Payout		30,542.51
Accrued Comp Time		0.00
W/H -Payable		
State W/H Payable		
FICA/Med Payable		
KPERS-Payable		
Prior Year Encumbrance		0.00
Lease Purchase Agreements		0.00
	TOTAL LIABILITIES	**723,447.29**
FUND BALANCE		
Revenues		1,762,038.07
Expenditures		-1,608,794.86
Fund Balance Reserved for Enc		144,265.95
Fund Balance Unreserved		3,704,562.10
Bdgt Stabilization Reserved Fund Bl		3,221,180.75
	TOTAL FUND BALANCE	**7,223,252.01**
	TOTAL LIABILITIES & FUND BALANCE	**7,946,699.30**

LIBRARY FUND

2/29/2016

BALANCE SHEET

ASSETS:		
Cash		99,742.55
	TOTAL ASSETS	**99,742.55**
FUND BALANCE		
Revenues		734,966.69
Expenditures		-745,381.22
Fund Balance Unreserved		110,157.08
	TOTAL FUND BALANCE	**99,742.55**

AIRPORT FUND

2/29/2016

BALANCE SHEET

ASSETS:		
Cash		244,917.82
Accts. Receivable		0.00
Accts. Receivable-Misc. Sources		0.00
	TOTAL ASSETS	**244,917.82**
LIABILITIES		
Control Pay Payable		0.00
Accounts Payable		0.00
Accrued Payroll		2,887.80
Accrued Vacation/PTO		3,205.42
Accrued Sick Leave Payout		
Prior Year Encumbrance		0.00
	TOTAL LIABILITIES	**6,093.22**
FUND BALANCE		
Revenues		145,553.15
Expenditures		-28,514.12
Fund Balance Reserved for Enc		6,976.50
Fund Balance Unreserved		114,809.07
	TOTAL FUND BALANCE	**238,824.60**
	TOTAL LIABILITIES & FUND BALANCE	**244,917.82**

PUBLIC SAFETY EQUIPMENT FUND

2/29/2016

BALANCE SHEET

ASSETS:		
Cash		331,212.08
	TOTAL ASSETS	**331,212.08**
LIABILITIES:		
Accounts Payable		0.00
	TOTAL LIABILITIES	**0.00**
FUND BALANCE		
Revenues		259,987.64
Expenditures		-11,648.52
Fund Balance Reserved for Enc		20,837.00
Fund Balance Unreserved		62,035.96
	TOTAL FUND BALANCE	**331,212.08**

EMPLOYEE BENEFIT FUND

2/29/2016

BALANCE SHEET

ASSETS:		
Cash		1,438,828.35
Accts. Receivable		0.00
Accts. Receivable-Misc. Sources		0.00
	TOTAL ASSETS	**1,438,828.35**
LIABILITIES		
Accounts Payable		0.00
	TOTAL LIABILITIES	**0.00**
FUND BALANCE		
Revenues		1,560,063.96
Expenditures		-945,624.04
Fund Balance Reserved for Enc		0.00
Fund Balance Unreserved		824,388.43
	TOTAL FUND BALANCE	**1,438,828.35**
	TOTAL LIABILITIES & FUND BALANCE	**1,438,828.35**

SPECIAL HIGHWAY FUND

2/29/2016

BALANCE SHEET

ASSETS:		
Cash		395,789.03
Grants Receivable		0.00
	TOTAL ASSETS	**395,789.03**
LIABILITIES		
Accounts Payable		0.00
Control Pay Payable		0.00
Due To Other Funds		0.00
Prior Year Encumbrance		0.00
	TOTAL LIABILITIES	**0.00**
FUND BALANCE		
Revenues		149,657.59
Expenditures		0.00
Fund Balance Reserved for Enc		4,082.61
Fund Balance Unreserved		242,048.83
	TOTAL FUND BALANCE	**395,789.03**
	TOTAL LIABILITIES & FUND BALANCE	**395,789.03**

SPECIAL PARK & RECREATION FUND

2/29/2016

BALANCE SHEET

ASSETS:		
Cash		215,732.60
	TOTAL ASSETS	**215,732.60**
LIABILITIES		
Accounts Payable		0.00
	TOTAL LIABILITIES	**0.00**
FUND BALANCE		
Revenues		0.00
Expenditures		-669.00
Fund Balance Reserved for Enc		3,988.74
Fund Balance Unreserved		212,412.86
	TOTAL FUND BALANCE	**215,732.60**
	TOTAL LIABILITIES & FUND BALANCE	**215,732.60**

SPECIAL ALCOHOL FUND

2/29/2016

BALANCE SHEET

ASSETS:		
Cash		34,334.46
	TOTAL ASSETS	**34,334.46**
LIABILITIES		
Accrued Payroll		0.00
Accrued Vacation		0.00
Accounts Payable		0.00
	TOTAL LIABILITIES	**0.00**
FUND BALANCE		
Revenues		
Expenditures		-30,000.00
Fund Balance Reserved for Enc		1,000.00
Fund Balance Unreserved		63,334.46
	TOTAL FUND BALANCE	**34,334.46**
	TOTAL LIABILITIES & FUND BALANCE	**34,334.46**

CONVENTION & VISITOR'S BUREAU FUND

2/29/2016

BALANCE SHEET

ASSETS:		
Cash		909,264.86
Accts. Receivable-Misc. Sources		0.00
	TOTAL ASSETS	**909,264.86**
LIABILITIES		
Accounts Payable		0.00
Accrued Payroll		2,822.85
Accrued Vacation/PTO		4,773.68
Accrued Comp Time		0.00
Prior Year Encumbrance		0.00
	TOTAL LIABILITIES	**7,596.53**
FUND BALANCE		
Revenues		240,461.34
Expenditures		-117,035.23
Fund Balance Reserved for Enc		13,147.95
Fund Balance Unreserved		765,094.27
	TOTAL FUND BALANCE	**901,668.33**
	TOTAL LIABILITIES & FUND BALANCE	**909,264.86**

NEW EQUIPMENT RESERVE FUND

2/29/2016

BALANCE SHEET

ASSETS:		
Cash		4,076,857.45
	TOTAL ASSETS	**4,076,857.45**
LIABILITIES		
Accounts Payable		0.00
	TOTAL LIABILITIES	**0.00**
FUND BALANCE		
Revenues		1,222.06
Expenditures		-1,480.00
Fund Balance Reserved for Enc		13,830.00
Fund Balance Unreserved		4,063,285.39
	TOTAL FUND BALANCE	**4,076,857.45**
	TOTAL LIABILITIES & FUND BALANCE	**4,076,857.45**

GRANTS- MULTI FUND

2/29/2016

BALANCE SHEET

ASSETS:		
Cash		0.00
Loan Receivable		0.00
	TOTAL ASSETS	**0.00**
LIABILITIES		
Accounts Payable		0.00
	TOTAL LIABILITIES	**0.00**
FUND BALANCE		
Revenues		0.00
Expenditures		0.00
Fund Balance Unreserved		
	TOTAL FUND BALANCE	**0.00**
	TOTAL LIABILITIES & FUND BALANCE	**0.00**

LIBRARY EMPLOYEE BENEFIT FUND

2/29/2016

BALANCE SHEET

ASSETS:		
Cash		14,881.19
	TOTAL ASSETS	**14,881.19**
FUND BALANCE		
Revenues		112,975.36
Expenditures		-114,576.89
Fund Balance Unreserved		16,482.72
	TOTAL FUND BALANCE	**14,881.19**

GOLF COURSE IMPROVEMENT FUND

2/29/2016

BALANCE SHEET

ASSETS:		
Cash		85,492.39
	TOTAL ASSETS	**85,492.39**
LIABILITIES		
Accounts Payable		
	TOTAL LIABILITIES	**0.00**
FUND BALANCE		
Revenues		15,163.76
Expenditures		0.00
Fund Balance Reserved for Enc		0.00
Fund Balance Unreserved		70,328.63
	TOTAL FUND BALANCE	**85,492.39**
	TOTAL LIABILITIES & FUND BALANCE	**85,492.39**

PARK DEVELOPMENT FUND

2/29/2016

BALANCE SHEET

ASSETS:		
Cash		5,026.93
	TOTAL ASSETS	**5,026.93**
FUND BALANCE		
Revenues		
Expenditures		
Fund Balance Reserved for Enc		0.00
Fund Balance Unreserved		5,026.93
	TOTAL FUND BALANCE	**5,026.93**

DEPT. OF JUSTICE

2/29/2016

BALANCE SHEET

ASSETS:		
Cash		1,210.51
	TOTAL ASSETS	**1,210.51**
LIABILITIES		
Accounts Payable		0.00
	TOTAL LIABILITIES	**0.00**
FUND BALANCE		
Revenues		
Expenditures		0.00
Fund Balance Reserved for Enc		0.00
Fund Balance Unreserved		1,210.51
	TOTAL FUND BALANCE	**1,210.51**

SPORTS COMPLEX FUND

2/29/2016

BALANCE SHEET

ASSETS:		
Cash		1,945,335.05
Accts. Receivable-Misc. Sources		0.00
Due From Other Funds		
	TOTAL ASSETS	**1,945,335.05**
LIABILITIES		
Accounts Payable		0.00
	TOTAL LIABILITIES	**0.00**
FUND BALANCE		
Revenues		16,000.00
Expenditures		0.00
Fund Balance Reserved for Encumbrances		0.00
Fund Balance Unreserved		1,929,335.05
	TOTAL FUND BALANCE	**1,945,335.05**
	TOTAL LIABILITIES & FUND BALANCE	**1,945,335.05**

STORMWATER MANAGEMENT

2/29/2016

BALANCE SHEET

ASSETS:		
Cash		228,899.98
Due From Other Funds		58,951.34
	TOTAL ASSETS	**287,851.32**
LIABILITIES		
Accounts Payable		0.00
Control Pay Payable		0.00
Accrued Payroll		1,568.21
	TOTAL LIABILITIES	**1,568.21**
FUND BALANCE		
Revenues		195,083.95
Expenditures		-8,767.82
Fund Balance Reserved for Encumbrances		10,121.59
Fund Balance Unreserved		89,845.39
	TOTAL FUND BALANCE	**286,283.11**
	TOTAL LIABILITIES & FUND BALANCE	**287,851.32**

PARKS IMPROVEMENT FUND

2/29/2016

BALANCE SHEET

ASSETS:		
Cash		47,716.86
Accts. Receivable		0.00
	TOTAL ASSETS	**47,716.86**
LIABILITIES		
Accounts Payable		0.00
Due To Other Accounts		0.00
	TOTAL LIABILITIES	**0.00**
FUND BALANCE		
Revenues		0.00
Expenditures		1,870.31
Fund Balance Reserved for Enc		29,893.66
Fund Balance Unreserved		15,952.89
	TOTAL FUND BALANCE	**47,716.86**
	TOTAL LIABILITIES & FUND BALANCE	**47,716.86**

ELLIS COUNTY SALES TAX

2/29/2016

BALANCE SHEET

ASSETS:		
Cash		0.00
Due From Other Funds		
	TOTAL ASSETS	**0.00**
LIABILITIES		
Accounts Payable		0.00
	TOTAL LIABILITIES	**0.00**
FUND BALANCE		
Revenues		291,971.38
Expenditures		-291,971.38
Fund Balance Reserved		0.00
Fund Balance Unreserved		0.00
	TOTAL FUND BALANCE	**0.00**
	TOTAL LIABILITIES & FUND BALANCE	**0.00**

CITY COMMISSION CAPITAL RESERVE

2/29/2016

BALANCE SHEET

ASSETS:		
Cash		3,401,367.98
Due From Other Funds		
	TOTAL ASSETS	**3,401,367.98**
LIABILITIES		
Accounts Payable		0.00
	TOTAL LIABILITIES	**0.00**
FUND BALANCE		
Revenues		1,038.52
Expenditures		-22,179.92
Fund Balance Reserved		0.00
Fund Balance Unreserved		3,422,509.38
	TOTAL FUND BALANCE	**3,401,367.98**
	TOTAL LIABILITIES & FUND BALANCE	**3,401,367.98**

CAPITAL PROJECTS FUND

2/29/2016

BALANCE SHEET

ASSETS:		
Cash		-574,614.09
Accts. Receivable-Misc. Sources		
Due From Other Funds		0.00
	TOTAL ASSETS	**-574,614.09**
LIABILITIES		
Accounts Payable		0.00
	TOTAL LIABILITIES	**0.00**
FUND BALANCE		
Revenues		0.00
Expenditures		222,324.00
Fund Balance Reserved for Enc		3,388,348.38
Fund Balance Unreserved		-4,185,286.47
	TOTAL FUND BALANCE	**-574,614.09**
	TOTAL LIABILITIES & FUND BALANCE	**-574,614.09**

CAPITAL PROJECTS 2001 FUND

2/29/2016

BALANCE SHEET

ASSETS:		
Cash		0.00
Due From Other Funds		
	TOTAL ASSETS	**0.00**
LIABILITIES		
Due To Other Funds		0.00
Accounts Payable		0.00
	TOTAL LIABILITIES	**0.00**
FUND BALANCE		
Revenues		0.00
Expenditures		
Fund Balance Unreserved		0.00
	TOTAL FUND BALANCE	**0.00**
	TOTAL LIABILITIES & FUND BALANCE	**0.00**

AIRPORT IMPROVEMENT FUND

2/29/2016

BALANCE SHEET

ASSETS:		
Cash		254,756.75
Accts. Receivable		0.00
Grants Receivable		185,534.00
	TOTAL ASSETS	**440,290.75**
LIABILITIES		
Accounts Payable		0.00
Due To Other Accounts		0.00
	TOTAL LIABILITIES	**0.00**
FUND BALANCE		
Revenues		93,004.80
Expenditures		0.00
Fund Balance Reserved for Enc		608,308.24
Fund Balance Unreserved		-261,022.29
	TOTAL FUND BALANCE	**440,290.75**
	TOTAL LIABILITIES & FUND BALANCE	**440,290.75**

BOND & INTEREST FUND

2/29/2016

BALANCE SHEET

ASSETS:		
Cash		749,489.89
Due From Other Funds		0.00
	TOTAL ASSETS	**749,489.89**
LIABILITIES		
Lease Purchase Agreements		0.00
	TOTAL LIABILITIES	**0.00**
FUND BALANCE		
Revenues		756,060.11
Expenditures		-194,094.19
Fund Balance Reserved		0.00
Fund Balance Unreserved		187,523.97
	TOTAL FUND BALANCE	**749,489.89**
	TOTAL LIABILITIES & FUND BALANCE	**749,489.89**

TRANSPORTATION DD SALES TAX FUND

2/29/2016

BALANCE SHEET

ASSETS:		
Cash		14,518.22
Due From Other Funds		
	TOTAL ASSETS	**14,518.22**
LIABILITIES		
Accounts Payable		0.00
	TOTAL LIABILITIES	**0.00**
FUND BALANCE		
Revenues		31,663.89
Expenditures		-37,059.99
Fund Balance Reserved		0.00
Fund Balance Unreserved		19,914.32
	TOTAL FUND BALANCE	**14,518.22**
	TOTAL LIABILITIES & FUND BALANCE	**14,518.22**

HOME DEPOT-ECONOMIC DEVELOPMENT BONDS

2/29/2016

BALANCE SHEET

ASSETS:		
Cash		203,071.56
Cash-Restricted		24,608.90
	TOTAL ASSETS	**227,680.46**
LIABILITIES		
Accounts Payable		0.00
	TOTAL LIABILITIES	**0.00**
FUND BALANCE		
Revenues		67,128.56
Expenditures		-41,902.50
Fund Balance Reserved		0.00
Fund Balance Unreserved		202,454.40
	TOTAL FUND BALANCE	**227,680.46**
	TOTAL LIABILITIES & FUND BALANCE	**227,680.46**

48th & ROTH AVE.-CID

2/29/2016

BALANCE SHEET

ASSETS:		
Cash		10,896.32
Due From Other Funds		
	TOTAL ASSETS	**10,896.32**
LIABILITIES		
Accounts Payable		0.00
	TOTAL LIABILITIES	**0.00**
FUND BALANCE		
Revenues		13,070.24
Expenditures		-26,141.40
Fund Balance Reserved		0.00
Fund Balance Unreserved		23,967.48
	TOTAL FUND BALANCE	**10,896.32**
	TOTAL LIABILITIES & FUND BALANCE	**10,896.32**

THE MALL CID

2/29/2016

BALANCE SHEET

ASSETS:		
Cash		153,465.85
Due From Other Funds		
	TOTAL ASSETS	**153,465.85**
LIABILITIES		
Accounts Payable		0.00
	TOTAL LIABILITIES	**0.00**
FUND BALANCE		
Revenues		44,004.82
Expenditures		0.00
Fund Balance Reserved		0.00
Fund Balance Unreserved		109,461.03
	TOTAL FUND BALANCE	**153,465.85**
	TOTAL LIABILITIES & FUND BALANCE	**153,465.85**

WATER & SEWER FUND
2/29/2016
BALANCE SHEET

ASSETS:		
		4,677,454.76
Accts. Receivable-Misc. Sources		
Cash-Water Sales Tax		27,076,980.89
Reserve-Capital Improvement		1,462,318.82
Reserve Bond & Int. Sales Tax		
Reserve Bond & Interest W/S		0.00
Consumers Accounts Receivable		407,547.54
Misc. Mdse Accts. Receivable		0.00
Issuance Cost-Sales Tax Fund		0.00
Issuance Costs Water /Sewer		38,469.57
Restricted Cash-2009A Bond		65,352.00
Reserve-W/S Revenue Bond 2009A		360,614.52
Due From Other Funds		0.00
Land		139,109.47
Land-R-9 Ranch		4,262,039.65
Accum Depreciation- R-9 Ranch		-1,378,314.05
Infrastructure		16,404,219.44
Accum Depreciation-Infrastruct		-9,365,694.40
Buildings		11,782,909.54
Accum Depreciation-Bldgs.		-7,028,243.26
Machinery & Equipment		11,484,210.04
Accum Dep-Machinery/Equipment		-9,088,648.17
Work in Progress-Big Creek		2,082,833.90
Water Sales Tax Expenditures		1,172,185.58
R-9 Ranch Expenditures		0.00
	TOTAL ASSETS	**54,555,345.84**
LIABILITIES		
Accounts Payable		8,998.20
Control Pay Payble		0.00
Due To Other Funds		
Accrued Payroll		31,970.20
Accrued Vacation/PTO		67,529.77
Sales Tax		-3,081.38
State Water Fee		6,662.83
Meter Deposit Payable		229,189.97
Refuse Collection		-63,728.26
Accrued Int. Payable-Bonds		-20,182.58
State Rev. Loan Payment		0.00
G O Bond Payable-Serv. Bldg.		0.00
Bonds Payable-W/S Rev. Bonds		0.00
Bonds Payable-Sales Tax Fund		0.00
Accrued Int. Pybl-Revolv Loan		0.00
Contributed Capital		3,215,104.63
Reserve for Bad Debts		-30.67
Bonds Payable-W/S 2009 A		3,100,000.00
Advance Developer Fee		0.00
Stormwater Fee		186.17
Over & Short		207.11
Prior Year Encumbrance		0.00
Monitoring Well Deposit		4,500.00
Overpayment-Water Sales		0.00
	TOTAL LIABILITIES	**6,577,325.99**
FUND BALANCE		
Revenues		461,253.57
Expenditures		-199,790.15
Fund Balance Reserved for Enc		188,333.60
Fund Balance Unreserved		46,400,786.75
Capital Imprv. Reserve Fund Balance		1,127,436.08
	TOTAL FUND BALANCE	**47,978,019.85**
	TOTAL LIABILITIES	
		54,555,345.84

SOLID WASTE FUND

2/29/2016

BALANCE SHEET

ASSETS:		
Cash		552,655.69
Reserve Account		523,880.56
Accts. Receivable-Misc. Sources		0.00
Due From Other Funds		42,380.75
Buildings		294,594.00
Machinery & Equipment		1,633,486.00
Accum Dep-Machinery/Equipment		-1,231,694.55
	TOTAL ASSETS	**1,815,302.45**
LIABILITIES		
Accounts Payable		0.00
Control Pay Payble		0.00
Accrued Payroll		10,734.89
Accrued Vacation/PTO		27,636.76
Contributed Capital		115,383.00
Lease Purchase Obligation		0.00
	TOTAL LIABILITIES	**153,754.65**
FUND BALANCE		
Revenues		326,414.45
Expenditures		-80,014.52
Fund Balance Reserved for Enc		0.00
Fund Balance Unreserved		1,006,127.31
Solid Waste Reserve		409,020.56
	TOTAL FUND BALANCE	**1,661,547.80**
	TOTAL LIABILITIES & FUND BALANCE	**1,815,302.45**

WASTE WATER FUND

2/29/2016

BALANCE SHEET

ASSETS:		
Cash		333,068.67
Due From Other Funds		
	TOTAL ASSETS	**333,068.67**
LIABILITIES		
Accounts Payable		0.00
	TOTAL LIABILITIES	**0.00**
FUND BALANCE		
Revenues		457,302.08
Expenditures		-124,233.41
Fund Balance Reserved		0.00
Fund Balance Unreserved		0.00
	TOTAL FUND BALANCE	**333,068.67**
	TOTAL LIABILITIES & FUND BALANCE	**333,068.67**

WATER CONSERVATION / WATER SALES TAX

2/29/2016

BALANCE SHEET

ASSETS:		
Cash		503,393.42
Due From Other Funds		
	TOTAL ASSETS	**503,393.42**
LIABILITIES		
Accounts Payable		0.00
	TOTAL LIABILITIES	**0.00**
FUND BALANCE		
Revenues		531,122.46
Expenditures		-29,229.04
Fund Balance Reserved		0.00
Fund Balance Unreserved		1,500.00
	TOTAL FUND BALANCE	**503,393.42**
	TOTAL LIABILITIES & FUND BALANCE	**503,393.42**

WATER SALES TAX RESERVE

2/29/2016

BALANCE SHEET

ASSETS:		
Cash		-66,639.53
Due From Other Funds		
	TOTAL ASSETS	**-66,639.53**
LIABILITIES		
Accounts Payable		0.00
	TOTAL LIABILITIES	**0.00**
FUND BALANCE		
Revenues		1,408.52
Expenditures		-68,048.05
Fund Balance Reserved		0.00
Fund Balance Unreserved		0.00
	TOTAL FUND BALANCE	**-66,639.53**
	TOTAL LIABILITIES & FUND BALANCE	**-66,639.53**

FIRE INSURANCE TRUST FUND

2/29/2016

BALANCE SHEET

ASSETS:		
Cash		0.00
	TOTAL ASSETS	**0.00**
FUND BALANCE		
Revenues		0.00
Expenditures		0.00
Fund Balance Unreserved		0.00
	TOTAL FUND BALANCE	**0.00**

MUNICIPAL COURT AGENCY FUND

2/29/2016

BALANCE SHEET

ASSETS:		
Cash		127,834.29
	TOTAL ASSETS	**127,834.29**
LIABILITIES		
Accounts Payable		0.00
Due To Other Accounts		41,446.00
Bonds Payable		27,791.00
Over & Short		-0.50
	TOTAL LIABILITIES	**69,236.50**
FUND BALANCE		
Revenues		44,649.27
Expenditures		-11,484.00
Fund Balance Reserved for Enc		9,781.00
Fund Balance Unreserved		15,651.52
	TOTAL FUND BALANCE	**58,597.79**
	TOTAL LIABILITIES & FUND BALANCE	**127,834.29**

City of Hays Revenues

Month of February 2016

	Budgeted 2016	Collections Current Mo.	Collections Current Mo. Previous Year	Collections Current YTD
WA CONSERV REVENUES				
INTEREST ON INVESTMENTS	45,000.00	8,775.46	0.00	8,775.46
LOCAL SALES TAX	3,085,293.00	522,212.00	0.00	522,212.00
MISCELLANEOUS REVENUE	0.00	5.00	0.00	135.00
R-9 RANCH REVENUE	250,000.00	0.00	0.00	0.00
Total Revenues	**$3,380,293.00**	**$530,992.46**	**$0.00**	**$531,122.46**
48TH/ROTH AVE CID-REVENUES				
LOCAL SALES TAX	0.00	5,879.01	6,176.27	12,938.87
MISCELLANEOUS REVENUE	0.00	131.37	35.67	131.37
Total Revenues	**$0.00**	**$6,010.38**	**$6,211.94**	**$13,070.24**
AIRPORT FUND REVENUES				
16/20 M TRUCK TAX	1,220.00	0.00	0.00	95.40
AD VALOREM PROPERTY TAX	214,351.00	0.00	0.00	124,372.88
AIRPORT-FUEL SALES	20,000.00	5,490.92	3,241.63	5,490.92
BUSINESS LICENSES	6,600.00	0.00	1,100.00	0.00
COMMERCIAL VEHICLE TAX	803.00	0.00	0.00	58.42
DELINQUENT TAXES	0.00	0.00	0.00	0.00
FARMING (LEASES)	17,000.00	0.00	0.00	0.00
FEDERAL GOVERNMENT AID/GRANT	0.00	0.00	0.00	0.00
LANDING FEES	4,000.00	0.00	0.00	0.00
MISCELLANEOUS REVENUE	4,000.00	0.00	513.50	2,268.41
MOTOR VEHICLE TAX	13,027.00	0.00	0.00	5,375.17
NEIGHBORHOOD REVIT REBATE	(614.00)	0.00	0.00	-199.57
PRIOR YEAR ENCUMBRANCE	0.00	0.00	0.00	0.00
RECREATIONAL VEHICLE TAX	191.00	0.00	0.00	94.69
RENTALS	76,565.00	3,769.26	7,262.62	7,797.26
WATERCRAFT TAX	126.00	0.00	0.00	0.00
Total Revenues	**$357,269.00**	**$9,260.18**	**$12,117.75**	**$145,353.58**
AIRPORT IMPR.FUND REVENUES				
FEDERAL & STATE GRANTS	0.00	1,046.00	375,585.63	88,493.00
MISCELLANEOUS REVENUE	0.00	0.00	0.00	0.00
NOTE/BOND PROCEEDS	0.00	0.00	0.00	0.00
PASSENGER FACILITY CHARGE	0.00	1,843.18	0.00	4,511.80
PRIOR YEAR ENCUMBRANCE	0.00	0.00	0.00	0.00
TEMPORARY NOTES	0.00	0.00	0.00	0.00
TEMPORARY NOTES	0.00	0.00	0.00	0.00
TEMPORARY NOTES	0.00	0.00	0.00	0.00
TRANSFER FROM AIRPORT	0.00	0.00	0.00	0.00
TRANSFERS	0.00	0.00	0.00	0.00
TRNSF FRM FIN POLICY PROJECTS	0.00	0.00	0.00	0.00
Total Revenues	**$0.00**	**$2,889.18**	**$375,585.63**	**$93,004.80**

Period (Month) = 2.00

	Budgeted 2016	Collections Current Mo.	Collections Current Mo. Previous Year	Collections Current YTD
BOND & INTEREST REVENUES				
16/20 M TRUCK TAX	4,688.00	0.00	0.00	388.80
AD VALOREM PROPERTY TAX	754,872.00	0.00	0.00	437,981.57
COMMERCIAL VEHICLE TAX	3,085.00	0.00	0.00	238.11
DELINQUENT TAXES	0.00	0.00	0.00	1,213.53
MISCELLANEOUS REVENUE	0.00	0.00	0.00	0.00
MOTOR VEHICLE TAX	50,056.00	0.00	0.00	21,908.53
NEIGHBORHOOD REVIT REBATE	(2,107.00)	0.00	0.00	-702.76
RECEIVED FROM TIF PROCEEDS	0.00	0.00	0.00	0.00
RECREATIONAL VEHICLE TAX	735.00	0.00	0.00	385.98
SPECIAL ASSESSMENT TAX	510,608.00	0.00	0.00	293,943.59
TRANSFER FROM CAPITAL PROJECTS	0.00	0.00	0.00	0.00
TRANSFER FROM GENERAL FUND	0.00	0.00	0.00	0.00
TRANSFER FROM SPECIAL HIGHWAY	0.00	0.00	0.00	0.00
TRANSFER FROM WATER/SEWER FUND	0.00	0.00	0.00	0.00
TRANSFERS	0.00	0.00	0.00	0.00
WATERCRAFT TAX	484.00	0.00	0.00	0.00
Total Revenues	**$1,322,421.00**	**$0.00**	**$0.00**	**$755,357.35**
CITY COMMISSION CPTL RESRV REV				
INTEREST ON INVESTMENTS	0.00	603.57	0.00	1,038.52
MISCELLANEOUS REVENUE	0.00	0.00	0.00	0.00
TRNSF FRM FIN POLICY PROJECTS	0.00	0.00	0.00	0.00
Total Revenues	**$0.00**	**$603.57**	**$0.00**	**$1,038.52**
CONVENTION & VISITOR'S REVENUE				
MISCELLANEOUS REVENUE	40,000.00	3,049.45	3,287.00	6,336.45
TRANSIENT GUEST TAX	792,058.00	0.00	0.00	234,124.89
Total Revenues	**$832,058.00**	**$3,049.45**	**$3,287.00**	**$240,461.34**
CULTURE & RECREATION REVENUES				
GOLF COURSE REVENUE	307,000.00	98,540.55	48,151.49	132,024.67
LOCAL ALCOHOL LIQUOR TAX	131,390.00	0.00	0.00	0.00
Total Revenues	**$438,390.00**	**$98,540.55**	**$48,151.49**	**$132,024.67**
DOJ PROGRAM-REVENUES				
MISCELLANEOUS REVENUE	0.00	0.00	0.00	0.00
Total Revenues	**$0.00**	**$0.00**	**$0.00**	**$0.00**
ELLIS CO. SALES TAX-REVENUES				
LOCAL SALES TAX	0.00	157,746.45	180,549.65	291,971.38
Total Revenues	**$0.00**	**$157,746.45**	**$180,549.65**	**$291,971.38**

	Budgeted 2016	Collections Current Mo.	Collections Current Mo. Previous Year	Collections Current YTD
EMPLOYEE BENEFIT REVENUES				
16/20 M TRUCK TAX	14,372.00	0.00	0.00	1,094.13
AD VALOREM PROPERTY TAX	2,561,655.00	0.00	0.00	1,485,876.52
COMMERCIAL VEHICLE TAX	9,459.00	0.00	0.00	670.07
DELINQUENT TAXES	0.00	0.00	0.00	0.00
INSURANCE REFUNDS	0.00	0.00	0.00	0.00
INTEREST ON INVESTMENTS	2,000.00	100.60	74.74	283.23
MISCELLANEOUS REVENUE	0.00	2,967.11	0.00	9,400.81
MOTOR VEHICLE TAX	153,458.00	0.00	0.00	61,653.05
NEIGHBORHOOD REVIT REBATE	(6,979.00)	0.00	0.00	-2,384.12
RECREATIONAL VEHICLE TAX	2,254.00	0.00	0.00	1,086.15
TRANSFER FROM AIRPORT	0.00	0.00	0.00	0.00
TRANSFER FROM CVB	80,174.00	0.00	0.00	0.00
TRANSFER FROM GENERAL FUND	0.00	0.00	0.00	0.00
TRANSFER FROM RISK MANAGEMENT	0.00	0.00	0.00	0.00
TRANSFER FROM SOLID WASTE FUND	180,470.00	0.00	0.00	0.00
TRANSFER FROM SPECIAL ALCOHOL	24,812.00	0.00	0.00	0.00
TRANSFER FROM SPECIAL HIGHWAY	0.00	0.00	0.00	0.00
TRANSFER FROM SPORTS COMPLEX	17,836.00	0.00	0.00	0.00
TRANSFER FROM STORMWATER MGT	21,771.00	0.00	0.00	0.00
TRANSFER FROM WATER/SEWER FUND	492,896.00	0.00	0.00	0.00
TRANSFERS	0.00	0.00	0.00	0.00
TRNSF FRM WATER CONSERVATION	24,938.00	0.00	0.00	0.00
WATERCRAFT TAX	1,482.00	0.00	0.00	0.00
XFER FRM COMM CAPITAL RESERVE	0.00	0.00	0.00	0.00
Total Revenues	**$3,580,598.00**	**$3,067.71**	**$74.74**	**$1,557,679.84**
FIRE INS TRUST REVENUES				
MISCELLANEOUS REVENUE	0.00	0.00	0.00	0.00
Total Revenues	**$0.00**	**$0.00**	**$0.00**	**$0.00**

Period (Month) = 2.00

	Budgeted 2016	Collections Current Mo.	Collections Current Mo. Previous Year	Collections Current YTD
GENERAL GOVERNMENT REVENUES				
16/20 M TRUCK TAX	0.00	0.00	0.00	0.00
AD VALOREM PROPERTY TAX	0.00	0.00	0.00	0.00
BUILDING PERMITS	80,000.00	3,679.09	4,070.27	10,367.11
BUSINESS LICENSES	17,000.00	3,200.00	322.50	10,692.50
CITY-COUNTY REVENUE SHARING	0.00	0.00	0.00	0.00
CMB & LIQUOR LICENSES	10,000.00	600.00	300.00	4,225.00
DELINQUENT TAXES	0.00	0.00	0.00	0.00
FEDERAL GOVERNMENT AID/GRANT	0.00	0.00	0.00	0.00
FRANCHISE FEES	1,380,000.00	107,476.61	144,617.22	216,959.57
INTEREST ON INVESTMENTS	30,000.00	3,932.37	2,083.63	8,402.37
LOCAL AD VALOREM TAX REDUCTION	0.00	0.00	0.00	0.00
LOCAL SALES TAX	7,597,211.00	696,134.46	731,666.47	1,284,421.97
MISCELLANEOUS REVENUE	140,000.00	2,343.85	10,208.33	26,593.33
MOTOR VEHICLE TAX	0.00	0.00	0.00	0.00
OTHER LICENSES	500.00	0.00	0.00	0.00
PET LICENSES	18,000.00	3,575.00	3,884.00	5,965.00
PRIOR YEAR ENCUMBRANCE	0.00	0.00	0.00	0.00
RECREATIONAL VEHICLE TAX	0.00	0.00	0.00	0.00
RENTALS	1,200.00	100.00	100.00	200.00
STATE GOVERNMENT AID/GRANT	0.00	0.00	567.72	0.00
TRANSFER FROM AIRPORT	0.00	0.00	0.00	0.00
TRANSFER FROM CVB	67,325.00	0.00	0.00	0.00
TRANSFER FROM POOL CONSTRUCTIO	0.00	0.00	0.00	0.00
TRANSFER FROM SOLID WASTE FUND	228,600.00	0.00	0.00	0.00
TRANSFER FROM SPECIAL ALCOHOL	48,014.00	0.00	0.00	0.00
TRANSFER FROM SPECIAL HIGHWAY	0.00	0.00	0.00	0.00
TRANSFER FROM SPORTS COMPLEX	227,658.00	0.00	0.00	0.00
TRANSFER FROM STORMWATER MGT	65,674.00	0.00	0.00	0.00
TRANSFER FROM WATER SLS TAX	555,353.00	0.00	0.00	0.00
TRANSFER FROM WATER/SEWER FUND	998,248.00	0.00	0.00	0.00
TRANSFERS	0.00	0.00	0.00	0.00
Total Revenues	**$11,464,783.00**	**$821,041.38**	**$897,820.14**	**$1,567,826.85**
GOLF COURSE IMPR. FUND REVENUE				
GOLF COURSE REVENUE	0.00	11,453.76	5,267.14	14,713.14
MISCELLANEOUS REVENUE	0.00	3,500.00	0.00	3,500.00
Total Revenues	**$0.00**	**$14,953.76**	**$5,267.14**	**$18,213.14**
H DEPOT-ECON DEV BND-REVENUES				
MISCELLANEOUS REVENUE	0.00	0.00	0.00	0.00
RECEIVED FROM TIF PROCEEDS	219,317.00	9,679.00	20,864.00	67,128.56
Total Revenues	**$219,317.00**	**$9,679.00**	**$20,864.00**	**$67,128.56**
LIBRARY EMP. BENEFIT REVENUES				
16/20 M TRUCK TAX	994.00	0.00	0.00	81.20
AD VALOREM PROPERTY TAX	186,365.00	0.00	0.00	108,188.33
COMMERCIAL VEHICLE TAX	654.00	0.00	0.00	49.73
DELINQUENT TAXES	0.00	0.00	0.00	0.00
MOTOR VEHICLE TAX	10,610.00	0.00	0.00	4,575.49
NEIGHBORHOOD REVIT REBATE	(521.00)	0.00	0.00	-173.59
RECREATIONAL VEHICLE TAX	156.00	0.00	0.00	80.61
WATERCRAFT TAX	103.00	0.00	0.00	0.00
Total Revenues	**$198,361.00**	**$0.00**	**$0.00**	**$112,801.77**

	Budgeted 2016	Collections Current Mo.	Collections Current Mo. Previous Year	Collections Current YTD
LIBRARY FUND REVENUES				
16/20 M TRUCK TAX	6,785.00	0.00	0.00	533.14
AD VALOREM PROPERTY TAX	1,212,782.00	0.00	0.00	703,534.98
COMMERCIAL VEHICLE TAX	4,465.00	0.00	0.00	326.51
DELINQUENT TAXES	0.00	0.00	0.00	0.00
MOTOR VEHICLE TAX	72,448.00	0.00	0.00	30,042.80
NEIGHBORHOOD REVIT REBATE	(3,101.00)	0.00	0.00	-1,128.84
RECREATIONAL VEHICLE TAX	1,064.00	0.00	0.00	529.26
WATERCRAFT TAX	700.00	0.00	0.00	0.00
Total Revenues	**$1,295,143.00**	**$0.00**	**$0.00**	**$733,837.85**
NEW EQUIP RESERVE REVENUES				
FEDERAL & STATE GRANTS	0.00	0.00	0.00	0.00
INTEREST ON INVESTMENTS	0.00	603.57	266.95	1,222.06
MISCELLANEOUS REVENUE	0.00	0.00	0.00	0.00
TRANSFER FROM AIRPORT	0.00	0.00	0.00	0.00
TRANSFER FROM CVB	0.00	0.00	0.00	0.00
TRANSFER FROM GENERAL FUND	0.00	0.00	0.00	0.00
TRANSFER FROM PUBLIC SAFETY	0.00	0.00	0.00	0.00
TRANSFER FROM SPECIAL PARK	0.00	0.00	0.00	0.00
TRANSFER FROM SPORTS COMPLEX	0.00	0.00	0.00	0.00
TRANSFER FROM STORMWATER MGT	0.00	0.00	0.00	0.00
TRANSFER FROM WATER/SEWER FUND	0.00	0.00	0.00	0.00
TRANSFERS	0.00	0.00	0.00	0.00
Total Revenues	**$0.00**	**$603.57**	**$266.95**	**$1,222.06**
PARK DEVELOPMENT FUND-REVENUE				
MISCELLANEOUS REVENUE	0.00	0.00	0.00	0.00
Total Revenues	**$0.00**	**$0.00**	**$0.00**	**$0.00**
PARKS IMPROVEMENT FUND-REVENUE				
DOG PARK DONATIONS	0.00	0.00	0.00	0.00
MISCELLANEOUS REVENUE	0.00	0.00	0.00	0.00
Total Revenues	**$0.00**	**$0.00**	**$0.00**	**$0.00**
PUBLIC SAFETY EQUIP REVENUES				
16/20 M TRUCK TAX	2,440.00	0.00	0.00	190.68
AD VALOREM PROPERTY TAX	428,702.00	0.00	0.00	248,745.81
COMMERCIAL VEHICLE TAX	1,606.00	0.00	0.00	116.78
DELINQUENT TAXES	0.00	0.00	0.00	0.00
FEDERAL & STATE GRANTS	0.00	0.00	0.00	0.00
FEDERAL GOVERNMENT AID/GRANT	0.00	0.00	0.00	0.00
MISCELLANEOUS REVENUE	0.00	0.00	0.00	0.00
MOTOR VEHICLE TAX	26,053.00	0.00	0.00	10,745.08
NEIGHBORHOOD REVIT REBATE	(1,228.00)	0.00	0.00	-399.13
RECREATIONAL VEHICLE TAX	383.00	0.00	0.00	189.29
WATERCRAFT TAX	252.00	0.00	0.00	0.00
Total Revenues	**$458,208.00**	**$0.00**	**$0.00**	**$259,588.51**
PUBLIC SAFETY REVENUES				
ANIMAL CONTROL REVENUE	3,000.00	490.00	225.00	585.00
COURT APPOINTED REIMBURSEMENT	0.00	0.00	735.00	0.00
COURT COSTS	80,000.00	8,468.75	10,406.77	17,234.02
COURT FINES	530,000.00	35,357.58	44,468.23	70,485.81
LOCAL LAB FEES	0.00	0.00	0.00	0.00
Total Revenues	**$613,000.00**	**$44,316.33**	**$55,835.00**	**$88,304.83**
PUBLIC WORKS REVENUES				
GRAVE OPENING	4,000.00	350.00	1,050.00	600.00
SALE OF CEMETERY LOTS	6,300.00	2,250.00	1,000.00	2,250.00
Total Revenues	**$10,300.00**	**$2,600.00**	**$2,050.00**	**$2,850.00**

Period (Month) = 2.00

	Budgeted 2016	Collections Current Mo.	Collections Current Mo. Previous Year	Collections Current YTD
RISK MANAGEMENT REVENUES				
INSURANCE REFUNDS	0.00	0.00	0.00	0.00
MISCELLANEOUS REVENUE	0.00	0.00	0.00	0.00
TRANSFER FROM EMPLOYEE BENEFIT	0.00	0.00	0.00	0.00
TRANSFERS	0.00	0.00	0.00	0.00
Total Revenues	**$0.00**	**$0.00**	**$0.00**	**$0.00**
SOLID WASTE FUND REVENUES				
INTEREST ON INVESTMENTS	750.00	80.48	32.03	175.18
MISCELLANEOUS REVENUE	30,000.00	2,358.40	3,266.80	4,715.95
PRIOR YEAR ENCUMBRANCE	0.00	0.00	0.00	0.00
REFUSE COLLECTION	1,270,000.00	107,057.94	106,188.92	351,469.66
YARD WASTE TAGS	1,200.00	63.00	0.00	63.00
Total Revenues	**$1,301,950.00**	**$109,559.82**	**$109,487.75**	**$356,423.79**
SPECIAL ALCOHOL FUND REVENUES				
LOCAL ALCOHOL LIQUOR TAX	131,390.00	0.00	0.00	0.00
Total Revenues	**$131,390.00**	**$0.00**	**$0.00**	**$0.00**
SPECIAL HIGHWAY REVENUES				
CONNECTING LINK MAINTENANCE	44,760.00	0.00	0.00	11,281.98
INTEREST ON INVESTMENTS	0.00	0.00	0.00	0.00
MISCELLANEOUS REVENUE	0.00	0.00	0.00	0.00
PRIOR YEAR ENCUMBRANCE	0.00	0.00	0.00	0.00
STATE GASOLINE TAX	545,160.00	0.00	0.00	138,375.61
TRANSFER FROM CAPITAL PROJECTS	0.00	0.00	0.00	0.00
TRANSFER FROM GENERAL FUND	500,000.00	0.00	0.00	0.00
Total Revenues	**$1,089,920.00**	**$0.00**	**$0.00**	**$149,657.59**
SPECIAL PRK & REC REVENUES				
DOG PARK DONATIONS	0.00	0.00	0.00	0.00
LOCAL ALCOHOL LIQUOR TAX	131,390.00	0.00	0.00	0.00
MISCELLANEOUS REVENUE	0.00	0.00	0.00	0.00
Total Revenues	**$131,390.00**	**$0.00**	**$0.00**	**$0.00**
SPORTS COMPLEX-REVENUES				
LOCAL SALES TAX	0.00	0.00	0.00	0.00
MISCELLANEOUS REVENUE	0.00	0.00	0.00	16,000.00
PRIOR YEAR ENCUMBRANCE	0.00	0.00	0.00	0.00
Total Revenues	**$0.00**	**$0.00**	**$0.00**	**$16,000.00**
STORMWATER MANAGEMENT REVENUES				
MISCELLANEOUS REVENUE	0.00	0.00	0.00	0.00
STORMWATER FEE	772,640.00	59,467.49	76,341.91	204,211.28
TRANSFER FROM GENERAL FUND	16,500.00	0.00	0.00	0.00
TRANSFER FROM WATER/SEWER FUND	0.00	0.00	0.00	0.00
Total Revenues	**$789,140.00**	**$59,467.49**	**$76,341.91**	**$204,211.28**
TDD SLS TAX REVENUES				
LOCAL SALES TAX	(56,562.92)	14,518.22	31,296.17	31,663.89
Total Revenues	**($56,562.92)**	**$14,518.22**	**$31,296.17**	**$31,663.89**
THE MALL CID-REVENUES				
LOCAL SALES TAX	0.00	26,485.93	0.00	44,004.82
MISCELLANEOUS REVENUE	0.00	0.00	0.00	0.00
Total Revenues	**$0.00**	**$26,485.93**	**$0.00**	**$44,004.82**
WASTE WATER FUND REVENUES				
INTEREST ON INVESTMENTS	4,500.00	402.38	0.00	692.35
MISCELLANEOUS REVENUE	3,000.00	477.50	0.00	477.50
PENALTY	12,500.00	1,295.45	0.00	2,440.65
SEWER SERVICE CHARGES	2,602,168.00	210,083.30	0.00	512,104.52
Total Revenues	**$2,622,168.00**	**$212,258.63**	**$0.00**	**$515,715.02**

Period (Month) = 2.00

	Budgeted 2016	Collections Current Mo.	Collections Current Mo. Previous Year	Collections Current YTD
WATER FUND REVENUES				
DEVELOPER CONTRIBUTION	0.00	0.00	0.00	0.00
FEDERAL & STATE GRANTS	0.00	0.00	0.00	0.00
INTEREST ON INVESTMENTS	10,500.00	402.38	779.48	998.28
INTEREST-SALES TAX COLLECTION	0.00	(1,529.65)	2,455.88	0.00
LOCAL SALES TAX	0.00	(239,887.00)	302,500.00	0.00
MISCELLANEOUS REVENUE	7,000.00	110.21	7,600.00	2,117.21
NOTE/BOND PROCEEDS	0.00	0.00	0.00	0.00
PENALTY	12,500.00	1,298.88	2,441.94	2,429.84
PRIOR YEAR ENCUMBRANCE	0.00	0.00	0.00	0.00
R-9 RANCH REVENUE	0.00	0.00	0.00	0.00
SEWER SERVICE CHARGES	0.00	(105.68)	158,332.76	-105.68
STORMWATER FEE	0.00	0.00	0.00	0.00
TAPS-TURN ONS	35,000.00	2,112.00	2,922.00	4,479.00
TRANSFER FROM SOLID WASTE FUND	0.00	0.00	0.00	0.00
TRANSFER FROM SPECIAL HIGHWAY	0.00	0.00	0.00	0.00
TRANSFER FROM WATER SLS TAX	0.00	0.00	0.00	0.00
TRANSFERS	0.00	0.00	0.00	0.00
WATER SALES	3,035,299.00	202,761.96	186,649.29	484,189.65
WATER SALES-CONSERVATION RATE	306,000.00	9,187.79	5,881.92	29,624.71
WATER VIOLATION	0.00	0.00	0.00	0.00
Total Revenues	**$3,406,299.00**	**($25,649.11)**	**$669,563.27**	**$523,733.01**
WATER SLS TX RESERVE REVENUES				
INTEREST ON INVESTMENTS	0.00	(2,216.06)	0.00	1,408.52
MISCELLANEOUS REVENUE	0.00	0.00	0.00	0.00
TRANSFERS	0.00	0.00	0.00	0.00
Total Revenues	**$0.00**	**($2,216.06)**	**$0.00**	**$1,408.52**
Grand Totals	**$33,585,835.08**	**$2,099,778.89**	**$2,494,770.53**	**$8,455,675.67**

Period (Month) = 2.00

City of Hays Expenditures

Month of February 2016

	Budgeted 2016	Expenses Current Mo.	Expenses Current Mo. Previous Year	Current Year Expenses YTD
48TH/ ROTH AVE CID-EXPENDITURE				
OTHER CONTRACTUAL SERVICES	0.00	26,141.40	7,098.65	26,141.40
Total Expenditures	**$0.00**	**$26,141.40**	**$7,098.65**	**$26,141.40**
AIRPORT FUND EXPENDITURES				
COMMUNICATION	3,000.00	185.76	270.76	185.76
CONTINGENCY	50,000.00	0.00	0.00	0.00
ELECTRICITY	35,320.00	2,335.37	497.97	5,306.89
GENERAL SUPPLIES & MATERIALS	34,000.00	1,592.13	759.97	1,592.13
GRANT FUNDING	0.00	0.00	0.00	0.00
LEGAL PUBLICATIONS & PRINTING	200.00	0.00	0.00	0.00
NATURAL GAS	7,665.00	588.16	319.07	1,602.16
NEIGHBORHOOD REVIT REBATE	0.00	0.00	0.00	0.00
NEW EQUIPMENT	0.00	0.00	0.00	0.00
OTHER CONTRACTUAL SERVICES	27,000.00	1,610.00	1,210.00	1,830.00
OVERTIME	2,000.00	988.02	310.25	1,268.71
PROFESSIONAL SERVICES	1,000.00	0.00	0.00	0.00
PROJECTS	0.00	0.00	0.00	0.00
PROMOTIONS	40,000.00	800.00	424.00	800.00
REPAIRS TO BLDGS & STRUCTURES	24,600.00	229.86	2,715.37	1,255.86
SALARIES	85,807.00	6,475.98	6,283.85	16,189.97
SEASONAL/PART TIME	5,000.00	339.51	0.00	409.41
TAX INCREMENT FINANCING DIST	2,524.00	0.00	0.00	1,841.11
TRANSFER TO AIRPORT IMPROVEMEN	94,608.00	0.00	0.00	0.00
TRANSFER TO BOND & INTEREST	0.00	0.00	0.00	0.00
TRANSFER TO EMPLOYEE BENEFIT	0.00	0.00	0.00	0.00
TRANSFER TO GENERAL FUND	0.00	0.00	0.00	0.00
TRANSFER TO NEW EQUIP. RESERVE	6,830.00	0.00	0.00	0.00
TRANSFERS	0.00	0.00	0.00	0.00
TRAVEL & TRAINING	3,000.00	29.50	0.00	29.50
UNIFORMS	880.00	46.94	44.28	105.24
Total Expenditures	**$423,434.00**	**$15,221.23**	**$12,835.52**	**$32,416.74**

Period (Month) = 2.00

	Budgeted 2016	Expenses Current Mo.	Expenses Current Mo. Previous Year	Current Year Expenses YTD
AIRPORT IMPR. FUND EXPENDITURE				
-17 GRANT	277,800.00	0.00	0.00	0.00
-18 GRANT	0.00	0.00	0.00	0.00
-19 GRANT	571,269.07	0.00	0.00	0.00
-20 GRANT (ARFF BLDG-DESIGN)	0.00	0.00	0.00	0.00
-21 GRANT	0.00	0.00	0.00	0.00
-22 ARFF FACILITY	0.00	0.00	0.00	0.00
-23 ARFF VEHICLE	1,684.00	0.00	0.00	0.00
-24 GRANT	9,636.00	0.00	0.00	0.00
-25 GRANT	71,062.35	0.00	0.00	0.00
-26 GRANT	106,335.00	0.00	0.00	0.00
-27 GRANT	3,715.00	0.00	0.00	0.00
-28 GRANT RECONSTRUCT 16/34	7,402,488.00	0.00	0.00	0.00
-29 GRANT (SNOW REMOVAL EQUIP)	0.00	0.00	0.00	0.00
-30 GRANT(TERMINAL BLDG DESGN)	0.00	0.00	0.00	0.00
-31 GRANT(TERM. BLDG. RENOV)	0.00	0.00	0.00	0.00
-32 GRANT	0.00	0.00	0.00	0.00
-33 GRANT	0.00	0.00	0.00	8,298.00
COMMUNICATION	0.00	0.00	0.00	0.00
LEGAL PUBLICATIONS & PRINTING	0.00	0.00	0.00	0.00
OTHER CONTRACTUAL SERVICES	0.00	0.00	0.00	0.00
OTHER CONTRACTUAL SERVICES	0.00	0.00	0.00	0.00
OTHER CONTRACTUAL SERVICES	0.00	0.00	0.00	0.00
PROFESSIONAL SERVICES	0.00	0.00	0.00	0.00
PROFESSIONAL SERVICES	0.00	0.00	0.00	0.00
PROFESSIONAL SERVICES	0.00	0.00	0.00	0.00
Total Expenditures	**$8,443,989.42**	**$0.00**	**$0.00**	**$8,298.00**
BALLFIELD MAINTENANCE				
BUILDINGS & STRUCTURES	0.00	0.00	0.00	0.00
CHEMICALS	6,500.00	148.80	0.00	148.80
COMMUNICATION	600.00	25.26	35.09	25.26
ELECTRICITY	0.00	0.00	0.00	0.00
EQUIPMENT EXPENSE	3,000.00	986.31	361.80	1,018.90
EQUIPMENT EXPENSE	0.00	536.48	0.00	536.48
EQUIPMENT EXPENSE	0.00	533.09	0.00	533.09
GENERAL SUPPLIES & MATERIALS	9,200.00	474.89	275.14	1,068.02
NATURAL GAS	0.00	0.00	0.00	0.00
NEW EQUIPMENT	6,500.00	0.00	0.00	6,420.00
OTHER CONTRACTUAL SERVICES	5,000.00	0.00	47.03	23.55
PROJECTS	0.00	0.00	0.00	0.00
RENTALS	300.00	0.00	85.00	0.00
REPAIRS TO BLDGS & STRUCTURES	7,000.00	142.93	12.86	142.93
TRAVEL & TRAINING	200.00	0.00	0.00	0.00
UNIFORMS	0.00	0.00	0.00	0.00
Total Expenditures	**$38,300.00**	**$2,847.76**	**$816.92**	**$9,917.03**

	Budgeted 2016	Expenses Current Mo.	Expenses Current Mo. Previous Year	Current Year Expenses YTD
BICKLE-SCHMIDT SPORTS COMPLEX				
BUILDINGS & STRUCTURES	0.00	0.00	0.00	0.00
CHEMICALS	16,000.00	148.80	0.00	148.80
COMMUNICATION	1,600.00	31.35	29.93	31.35
CONTINGENCY	0.00	0.00	0.00	0.00
ELECTRICITY	55,000.00	0.00	4,251.83	1,567.75
EQUIPMENT EXPENSE	7,000.00	859.41	113.63	921.69
EQUIPMENT EXPENSE	0.00	0.00	0.00	0.00
EQUIPMENT EXPENSE	0.00	0.00	0.00	0.00
EQUIPMENT EXPENSE	0.00	256.80	0.00	256.80
EQUIPMENT EXPENSE	0.00	1.73	0.00	1.73
EQUIPMENT EXPENSE	0.00	20.49	260.00	20.49
EQUIPMENT EXPENSE	0.00	914.85	0.00	914.85
EQUIPMENT EXPENSE	0.00	914.85	0.00	914.85
EQUIPMENT EXPENSE	0.00	7.76	0.00	7.76
EQUIPMENT EXPENSE	0.00	0.00	0.00	0.00
FUEL EXPENSE	7,000.00	0.00	0.00	0.00
FUEL EXPENSE	0.00	0.00	0.00	0.00
FUEL EXPENSE	0.00	0.00	0.00	0.00
FUEL EXPENSE	0.00	0.00	0.00	0.00
FUEL EXPENSE	0.00	0.00	0.00	0.00
FUEL EXPENSE	0.00	0.00	0.00	0.00
FUEL EXPENSE	0.00	0.00	0.00	0.00
FUEL EXPENSE	0.00	36.69	41.64	60.72
FUEL EXPENSE	0.00	0.00	0.00	0.00
FUEL EXPENSE	0.00	0.00	0.00	0.00
FUEL EXPENSE	0.00	0.00	0.00	0.00
GENERAL SUPPLIES & MATERIALS	35,000.00	1,151.62	1,548.37	2,459.87
NATURAL GAS	1,200.00	0.00	95.83	51.73
NEW EQUIPMENT	2,500.00	0.00	3,100.00	1,110.00
OFFICE SUPPLIES	300.00	26.29	0.00	26.29
OTHER CONTRACTUAL SERVICES	10,000.00	237.04	521.83	284.13
OVERTIME	2,000.00	0.00	0.00	0.00
PROJECTS	0.00	0.00	0.00	0.00
RENTALS	1,200.00	0.00	0.00	0.00
REPAIRS TO BLDGS & STRUCTURES	13,000.00	40.07	229.47	5,640.07
SALARIES	26,233.00	1,979.86	0.00	4,949.64
SEASONAL/PART TIME	28,900.00	0.00	0.00	0.00
TRANSFER TO NEW EQUIP. RESERVE	19,525.00	0.00	0.00	0.00
TRAVEL & TRAINING	400.00	0.00	0.00	0.00
UNIFORMS	800.00	26.36	8.68	52.72
Total Expenditures	**$227,658.00**	**$6,653.97**	**$10,201.21**	**$19,421.24**
BOND & INTEREST EXPENDITURES				
BOND PRINCIPAL	940,000.00	0.00	0.00	0.00
CASH BASIS RESERVE	60,000.00	0.00	0.00	0.00
ECONOMIC DEVELOPMENT BONDS	0.00	0.00	0.00	0.00
INTEREST COUPONS	369,194.00	186,907.92	194,651.26	186,907.92
INTEREST ON TEMPORARY NOTE	0.00	0.00	0.00	0.00
INTEREST ON TIF	0.00	0.00	0.00	0.00
LEVY STABILIZATION	0.00	0.00	0.00	0.00
NEIGHBORHOOD REVIT REBATE	0.00	0.00	0.00	0.00
OTHER CONTRACTUAL SERVICES	0.00	0.00	0.00	0.00
TAX INCREMENT FINANCING DIST	8,686.00	0.00	0.00	6,483.51
TRANSFER TO RESERVE FOR TIF	0.00	0.00	0.00	0.00
Total Expenditures	**$1,377,880.00**	**$186,907.92**	**$194,651.26**	**$193,391.43**

Period (Month) = 2.00

	Budgeted 2016	Expenses Current Mo.	Expenses Current Mo. Previous Year	Current Year Expenses YTD
BUILDINGS & GROUNDS				
COMMUNICATION	0.00	0.00	0.00	0.00
ELECTRICITY	435,000.00	31,804.63	5,199.68	61,860.96
GENERAL SUPPLIES & MATERIALS	4,000.00	146.25	51.71	146.25
NATURAL GAS	28,875.00	6,069.40	2,279.97	9,274.47
NEW EQUIPMENT	0.00	0.00	0.00	0.00
OTHER CONTRACTUAL SERVICES	26,060.00	2,339.70	1,930.58	4,727.96
PROJECTS	0.00	0.00	0.00	0.00
REPAIRS TO BLDGS & STRUCTURES	10,000.00	471.49	0.00	471.49
Total Expenditures	**$503,935.00**	**$40,831.47**	**$9,461.94**	**$76,481.13**
CEMETERIES				
BUILDINGS & STRUCTURES	0.00	0.00	0.00	0.00
CHEMICALS	2,500.00	0.00	0.00	0.00
COMMUNICATION	200.00	13.11	12.44	13.11
ELECTRICITY	0.00	0.00	0.00	0.00
EQUIPMENT EXPENSE	1,700.00	0.00	47.31	19.08
EQUIPMENT EXPENSE	0.00	0.00	0.00	0.00
EQUIPMENT EXPENSE	0.00	0.00	0.00	0.00
GENERAL SUPPLIES & MATERIALS	5,500.00	79.88	13.53	133.19
NEW EQUIPMENT	700.00	0.00	278.34	502.00
OTHER CONTRACTUAL SERVICES	900.00	0.00	0.00	0.00
PROJECTS	0.00	0.00	0.00	0.00
RENTALS	200.00	0.00	0.00	0.00
REPAIRS TO BLDGS & STRUCTURES	5,500.00	0.00	0.00	0.00
TRAVEL & TRAINING	300.00	0.00	0.00	0.00
UNIFORMS	0.00	0.00	0.00	0.00
Total Expenditures	**$17,500.00**	**$92.99**	**$351.62**	**$667.38**
CITY ATTORNEY				
LEGAL PUBLICATIONS & PRINTING	0.00	0.00	0.00	0.00
OTHER CONTRACTUAL SERVICES	1,000.00	0.00	0.00	35.00
PROFESSIONAL SERVICES	100,000.00	28,580.71	6,500.00	38,400.79
Total Expenditures	**$101,000.00**	**$28,580.71**	**$6,500.00**	**$38,435.79**
CITY COMMISSION				
COMMUNICATION	0.00	0.00	0.00	0.00
FINANCIAL POLICY PROJ-CAPITAL	2,141,545.00	0.00	0.00	0.00
FINANCIAL POLICY PROJ-CAPITAL	0.00	0.00	0.00	0.00
GENERAL SUPPLIES & MATERIALS	1,500.00	0.00	180.00	0.00
LEGAL PUBLICATIONS & PRINTING	500.00	0.00	0.00	0.00
OTHER CONTRACTUAL SERVICES	500.00	0.00	0.00	50.00
PROFESSIONAL SERVICES	0.00	0.00	0.00	0.00
PROJECTS	0.00	0.00	0.00	0.00
SALARIES	9,000.00	750.00	750.00	1,500.00
TRAVEL & TRAINING	20,000.00	220.86	2,021.80	220.86
Total Expenditures	**$2,173,045.00**	**$970.86**	**$2,951.80**	**$1,770.86**

	Budgeted 2016	Expenses Current Mo.	Expenses Current Mo. Previous Year	Current Year Expenses YTD
CITY MANAGER				
COMMUNICATION	3,700.00	187.11	205.24	187.11
CONTINGENCY	100,000.00	5,629.86	95.00	7,729.86
EXPENSE ALLOWANCE-CAR	0.00	0.00	0.00	0.00
GENERAL SUPPLIES & MATERIALS	2,200.00	42.77	180.00	42.77
INTERNSHIP	20,000.00	0.00	0.00	0.00
LEGAL PUBLICATIONS & PRINTING	0.00	0.00	0.00	0.00
NEW EQUIPMENT	0.00	0.00	0.00	0.00
ORGANIZATION DEVELOPMENT	0.00	0.00	0.00	0.00
OTHER CONTRACTUAL SERVICES	35,000.00	5,384.15	2,191.98	21,128.79
OVERTIME	3,500.00	73.72	198.11	129.01
PROFESSIONAL SERVICES	0.00	0.00	0.00	0.00
PROJECTS	0.00	0.00	0.00	0.00
SALARIES	318,193.00	25,300.62	25,446.08	59,770.61
TRAVEL & TRAINING	29,000.00	788.59	1,564.37	2,056.21
Total Expenditures	**$511,593.00**	**$37,406.82**	**$29,880.78**	**$91,044.36**
CTY COMMISSION CPTL RSRV EXPEN				
NEW EQUIPMENT	0.00	0.00	0.00	0.00
OTHER CONTRACTUAL SERVICES	0.00	0.00	0.00	0.00
PROJECTS	0.00	380.00	0.00	22,179.92
TRANSFER TO AIRPORT IMPROVEMEN	0.00	0.00	0.00	0.00
TRANSFER TO EMPLOYEE BENEFIT	0.00	0.00	0.00	0.00
Total Expenditures	**$0.00**	**$380.00**	**$0.00**	**$22,179.92**
CVB EXPENDITURES				
COMMUNICATION	6,000.00	134.92	126.16	134.92
CONTINGENCY	509,252.00	0.00	6,616.21	0.00
ELECTRICITY	9,000.00	697.90	0.00	1,460.53
GENERAL SUPPLIES & MATERIALS	0.00	0.00	0.00	0.00
GRANT FUNDING	0.00	0.00	0.00	0.00
INTERNSHIP	20,000.00	0.00	0.00	0.00
LEGAL PUBLICATIONS & PRINTING	110,000.00	4,437.60	3,270.72	11,835.60
NATURAL GAS	1,500.00	113.09	0.00	229.56
NEW EQUIPMENT	0.00	0.00	0.00	0.00
OFFICE SUPPLIES	5,000.00	133.95	225.77	133.95
OTHER CONTRACTUAL SERVICES	100,000.00	4,607.89	5,439.61	11,855.89
OUTSIDE AGENCIES	59,131.00	0.00	0.00	47,509.00
OVERTIME	1,500.00	0.00	0.00	119.91
PROJECTS	29,000.00	0.00	0.00	0.00
PROMOTIONS	110,000.00	3,533.40	66.00	21,753.75
RENTALS	0.00	0.00	0.00	0.00
REPAIRS TO BLDGS & STRUCTURES	10,000.00	315.54	350.50	1,451.33
SALARIES	204,883.00	15,162.28	8,073.85	37,717.79
SEASONAL/PART TIME	8,150.00	50.75	21.75	72.50
TRANSFER TO EMPLOYEE BENEFIT	80,174.00	0.00	0.00	0.00
TRANSFER TO GENERAL FUND	67,325.00	0.00	0.00	0.00
TRANSFER TO NEW EQUIP. RESERVE	2,760.00	0.00	0.00	0.00
TRANSFERS	0.00	0.00	0.00	0.00
TRAVEL & TRAINING	7,000.00	357.41	243.20	817.41
Total Expenditures	**$1,340,675.00**	**$29,544.73**	**$24,433.77**	**$135,092.14**

	Budgeted 2016	Expenses Current Mo.	Expenses Current Mo. Previous Year	Current Year Expenses YTD
DEBT SERVICE				
INT-REVENUE BND PAYMENT 2009A	0.00	0.00	10,755.83	0.00
INTEREST-REVENUE BOND	0.00	0.00	0.00	0.00
PRINCIPAL & INT. REVOLVING LOA	0.00	0.00	0.00	0.00
PRINCIPAL PAYMENT-SLS TX BOND	0.00	0.00	0.00	0.00
PWWSD #15	0.00	0.00	0.00	0.00
REV BOND PAYMENT 2009-A	0.00	0.00	24,166.66	0.00
REVENUE BOND PAYMENT	0.00	0.00	0.00	0.00
SALES TAX BOND ISSUE-INTEREST	0.00	0.00	0.00	0.00
UNAMORITIZED 1996 BOND IS.COST	0.00	0.00	0.00	0.00
WATER EXPLORATION	0.00	0.00	0.00	0.00
Total Expenditures	**$0.00**	**$0.00**	**$34,922.49**	**$0.00**
DEBT SERVICE - SALES TAX				
PRINCIPAL PAYMENT-SLS TX BOND	0.00	0.00	0.00	0.00
PWWSD #15	0.00	0.00	0.00	0.00
SALES TAX BOND ISSUE-INTEREST	0.00	0.00	0.00	0.00
TRANSFER-SALES TAX RESERVE	0.00	0.00	0.00	0.00
UNAMORITIZED 1996 BOND IS.COST	0.00	0.00	0.00	0.00
WATER EXPLORATION	0.00	0.00	0.00	0.00
Total Expenditures	**$0.00**	**$0.00**	**$0.00**	**$0.00**
DISPATCH				
COMMUNICATION	2,200.00	146.23	115.06	146.23
CONTINGENCY	5,000.00	0.00	0.00	0.00
LEGAL PUBLICATIONS & PRINTING	2,000.00	0.00	0.00	0.00
OFFICE SUPPLIES	1,000.00	0.00	0.00	0.00
OTHER CONTRACTUAL SERVICES	2,100.00	166.36	0.00	166.36
OVERTIME	47,165.00	3,232.76	1,869.56	13,801.96
SALARIES	504,819.00	29,051.63	37,188.48	74,911.60
TRAVEL & TRAINING	9,500.00	0.00	45.00	0.00
UNIFORMS	0.00	0.00	0.00	0.00
Total Expenditures	**$573,784.00**	**$32,596.98**	**$39,218.10**	**$89,026.15**
DOJ-EXPENDITURES				
NEW EQUIPMENT	0.00	0.00	0.00	0.00
OTHER CONTRACTUAL SERVICES	0.00	0.00	0.00	0.00
Total Expenditures	**$0.00**	**$0.00**	**$0.00**	**$0.00**
ECONOMIC DEVELOPMENT				
DOWNTOWN DEVELOPMENT CORP.	0.00	0.00	0.00	0.00
JOB BOUNTY	15,000.00	0.00	0.00	0.00
OTHER CONTRACTUAL SERVICES	214,378.00	175.00	175.00	114,728.00
Total Expenditures	**$229,378.00**	**$175.00**	**$175.00**	**$114,728.00**
ELLIS CO. SALES TAX-EXPENDITUR				
OTHER CONTRACTUAL SERVICES	0.00	157,746.45	180,549.65	291,971.38
Total Expenditures	**$0.00**	**$157,746.45**	**$180,549.65**	**$291,971.38**
EMPLOYEE BENEFIT EXPENDITURES				
CONTINGENCY	100,000.00	0.00	0.00	0.00
EMPLOYEE RETIREMENT	1,327,300.00	83,423.97	84,097.59	212,414.90
HEALTH INSURANCE	1,719,500.00	150,970.54	150,750.27	452,277.17
NEIGHBORHOOD REVIT REBATE	0.00	0.00	0.00	0.00
OTHER CONTRACTUAL SERVICES	45,676.00	6,693.19	3,300.41	10,094.09
PROFESSIONAL SERVICES	0.00	0.00	0.00	0.00
SOCIAL SECURITY	695,149.00	46,668.53	45,254.32	118,091.45
TAX INCREMENT FINANCING DIST	30,738.00	0.00	0.00	21,995.66
TRANSFER TO BOND & INTEREST	0.00	0.00	0.00	0.00
TRANSFER TO RISK MANAGEMENT	0.00	0.00	0.00	0.00
UNEMPLOYMENT COMPENSATION	19,991.00	0.00	0.00	5,301.03
WORKERS COMPENSATION	201,386.00	0.00	0.00	190,193.00
Total Expenditures	**$4,139,740.00**	**$287,756.23**	**$283,402.59**	**$1,010,367.30**

Period (Month) = 2.00

	Budgeted 2016	Expenses Current Mo.	Expenses Current Mo. Previous Year	Current Year Expenses YTD
FINANCE/CITY CLERK				
COMMUNICATION	1,400.00	78.93	92.26	78.93
CONTINGENCY	5,000.00	0.00	99.06	0.00
GENERAL SUPPLIES & MATERIALS	700.00	0.00	0.00	0.00
INSURANCE & SURETY BONDS	0.00	0.00	0.00	0.00
LEGAL PUBLICATIONS & PRINTING	12,000.00	613.60	1,063.25	613.60
NEW EQUIPMENT	0.00	0.00	0.00	0.00
OTHER CONTRACTUAL SERVICES	7,800.00	1,250.36	35.39	2,695.36
OVERTIME	500.00	219.70	244.48	219.70
PROFESSIONAL SERVICES	41,000.00	0.00	0.00	0.00
PROJECTS	0.00	0.00	0.00	0.00
SALARIES	305,611.00	24,673.37	21,509.53	60,290.10
TRAVEL & TRAINING	7,000.00	0.00	0.00	0.00
Total Expenditures	**$381,011.00**	**$26,835.96**	**$23,043.97**	**$63,897.69**
FIRE DEPARTMENT				
COMMUNICATION	6,600.00	534.59	546.56	534.59
CONTINGENCY	5,000.00	0.00	0.00	0.00
EQUIPMENT EXPENSE	52,000.00	706.00	313.46	831.82
EQUIPMENT EXPENSE	0.00	0.00	0.00	0.00
EQUIPMENT EXPENSE	0.00	0.00	0.00	0.00
EQUIPMENT EXPENSE	0.00	0.00	0.00	335.70
EQUIPMENT EXPENSE	0.00	0.00	0.00	0.00
EQUIPMENT EXPENSE	0.00	249.60	0.00	703.99
EQUIPMENT EXPENSE	0.00	0.00	0.00	0.00
EQUIPMENT EXPENSE	0.00	449.25	48.08	1,455.50
EQUIPMENT EXPENSE	0.00	0.00	0.00	0.00
EQUIPMENT EXPENSE	0.00	0.00	0.00	0.00
EQUIPMENT EXPENSE	0.00	0.00	0.00	0.00
EQUIPMENT EXPENSE	0.00	0.00	0.00	0.00
EQUIPMENT EXPENSE	0.00	0.00	0.00	0.00
EQUIPMENT EXPENSE	0.00	0.00	0.00	0.00
EQUIPMENT EXPENSE	0.00	0.00	433.59	1,963.58
EQUIPMENT EXPENSE	0.00	0.00	0.00	0.00
EQUIPMENT EXPENSE	0.00	0.00	0.00	0.00
EQUIPMENT EXPENSE	0.00	1,757.39	0.00	1,757.39
EQUIPMENT EXPENSE	0.00	0.00	0.00	0.00
EQUIPMENT EXPENSE	0.00	0.00	0.00	0.00
EQUIPMENT EXPENSE	0.00	0.00	0.00	0.00
EQUIPMENT EXPENSE	0.00	0.00	0.00	0.00
GENERAL SUPPLIES & MATERIALS	46,000.00	2,678.57	4,238.91	2,939.42
GRANT FUNDING	0.00	0.00	0.00	0.00
LEGAL PUBLICATIONS & PRINTING	500.00	72.00	0.00	72.00
NEW EQUIPMENT	0.00	0.00	0.00	0.00
OTHER CONTRACTUAL SERVICES	4,400.00	482.28	334.58	654.03
OVERTIME	121,000.00	8,560.71	6,840.83	28,467.91
PAID PER CALL	22,000.00	1,257.02	811.78	3,586.98
PROFESSIONAL SERVICES	0.00	0.00	0.00	0.00
PROJECTS	0.00	0.00	0.00	0.00
REPAIRS TO BLDGS & STRUCTURES	37,000.00	2,789.67	1,016.74	3,554.36
SALARIES	1,052,467.00	78,099.60	75,725.82	198,062.32
TRAINING CERTIFICATION	14,600.00	0.00	0.00	0.00
TRAVEL & TRAINING	33,200.00	6,146.49	2,106.91	6,446.49
UNIFORMS	9,400.00	119.98	4.50	119.98
Total Expenditures	**$1,404,167.00**	**$103,903.15**	**$92,421.76**	**$251,486.06**
FIRE INS TRUST EXPENDITURES				
OTHER CONTRACTUAL SERVICES	0.00	0.00	0.00	0.00
Total Expenditures	**$0.00**	**$0.00**	**$0.00**	**$0.00**
FLEET MAINTENANCE				
Total Expenditures	**$801,073.00**	**$31,587.17**	**$42,939.38**	**$64,103.43**

Period (Month) = 2.00

	Budgeted 2016	Expenses Current Mo.	Expenses Current Mo. Previous Year	Current Year Expenses YTD
GOLF COURSE				
BUILDINGS & STRUCTURES	0.00	0.00	0.00	0.00
CHEMICALS	75,000.00	0.00	0.00	0.00
COMMUNICATION	2,800.00	178.76	158.43	178.76
ELECTRICITY	0.00	0.00	0.00	0.00
EQUIPMENT EXPENSE	7,000.00	40.21	54.35	91.81
EQUIPMENT EXPENSE	0.00	0.00	0.00	0.00
EQUIPMENT EXPENSE	0.00	17.08	0.00	17.08
EQUIPMENT EXPENSE	0.00	0.00	0.00	0.00
EQUIPMENT EXPENSE	0.00	0.00	0.00	0.00
EQUIPMENT EXPENSE	0.00	317.85	0.00	317.85
EQUIPMENT EXPENSE	0.00	181.14	0.00	181.14
EQUIPMENT EXPENSE	0.00	0.00	0.00	0.00
EQUIPMENT EXPENSE	0.00	300.00	0.00	300.00
EQUIPMENT EXPENSE	0.00	435.17	0.00	435.17
EQUIPMENT EXPENSE	0.00	6.40	0.00	6.40
EQUIPMENT EXPENSE	0.00	0.00	0.00	0.00
GENERAL SUPPLIES & MATERIALS	31,100.00	781.91	1,744.65	1,738.82
LEGAL PUBLICATIONS & PRINTING	0.00	0.00	0.00	0.00
NATURAL GAS	0.00	0.00	0.00	0.00
NEW EQUIPMENT	3,900.00	0.00	0.00	0.00
OFFICE SUPPLIES	400.00	0.00	0.00	0.00
OTHER CONTRACTUAL SERVICES	32,900.00	1,925.00	2,160.16	3,865.00
OVERTIME	9,000.00	0.00	0.00	0.00
PRO SHOP CR CARD ACTIVITY	0.00	(974.62)	574.11	-381.22
PROJECTS	0.00	0.00	0.00	0.00
RENTALS	1,500.00	0.00	112.50	0.00
REPAIRS TO BLDGS & STRUCTURES	12,000.00	0.00	2,658.65	7,201.03
SALARIES	136,618.00	11,975.36	9,912.24	27,261.82
SEASONAL/PART TIME	50,000.00	551.00	0.00	888.25
TRAVEL & TRAINING	3,400.00	0.00	0.00	0.00
UNIFORMS	1,000.00	0.00	0.00	0.00
Total Expenditures	**$366,618.00**	**$15,735.26**	**$17,375.09**	**$42,101.91**
GOLF COURSE IMPR. EXPENDITURES				
GENERAL SUPPLIES & MATERIALS	0.00	0.00	0.00	0.00
OTHER CONTRACTUAL SERVICES	0.00	0.00	0.00	0.00
PROFESSIONAL SERVICES	0.00	0.00	0.00	0.00
REPAIRS TO BLDGS & STRUCTURES	0.00	0.00	0.00	735.00
Total Expenditures	**$0.00**	**$0.00**	**$0.00**	**$735.00**
H DEPOT ECON DEV BND-EXPENDITU				
BOND PRINCIPAL	130,000.00	0.00	0.00	0.00
INTEREST COUPONS	83,805.00	41,902.50	45,261.88	41,902.50
OTHER CONTRACTUAL SERVICES	0.00	0.00	0.00	0.00
Total Expenditures	**$213,805.00**	**$41,902.50**	**$45,261.88**	**$41,902.50**
HUMAN RESOURCES				
COMMUNICATION	1,000.00	51.93	51.68	51.93
LEGAL PUBLICATIONS & PRINTING	15,000.00	1,914.84	1,816.62	1,927.59
ORGANIZATION DEVELOPMENT	29,500.00	0.00	529.80	886.90
OTHER CONTRACTUAL SERVICES	1,717.00	0.00	108.76	109.22
OVERTIME	250.00	0.00	0.00	0.00
PROFESSIONAL SERVICES	40,800.00	2,802.50	722.50	4,952.50
PROJECTS	0.00	0.00	0.00	0.00
SALARIES	104,483.00	7,869.84	7,702.79	19,674.61
TRAVEL & TRAINING	3,000.00	143.08	0.00	155.24
Total Expenditures	**$195,750.00**	**$12,782.19**	**$10,932.15**	**$27,757.99**

	Budgeted 2016	Expenses Current Mo.	Expenses Current Mo. Previous Year	Current Year Expenses YTD
INFORMATION TECHNOLOGY				
COMMUNICATION	3,550.00	245.99	184.75	245.99
EQUIPMENT EXPENSE	9,250.00	193.70	1,578.91	193.70
GENERAL SUPPLIES & MATERIALS	3,500.00	249.70	257.45	249.70
LEGAL PUBLICATIONS & PRINTING	0.00	0.00	0.00	0.00
NEW EQUIPMENT	22,060.00	783.34	193.59	783.34
OFFICE SUPPLIES	14,950.00	61.98	526.95	61.98
OTHER CONTRACTUAL SERVICES	196,130.00	47,133.50	9,027.65	78,247.25
OVERTIME	1,200.00	124.53	156.40	184.77
PROJECTS	0.00	0.00	0.00	0.00
SALARIES	289,772.00	21,250.80	20,713.87	53,127.01
TRAVEL & TRAINING	17,610.00	3,764.32	149.95	4,036.77
Total Expenditures	**$558,022.00**	**$73,807.86**	**$32,789.52**	**$137,130.51**
INTERGOVERNMENTAL ACCOUNT				
COMMUNICATION	57,000.00	3,124.52	3,091.21	13,624.24
EQUIPMENT EXPENSE	0.00	0.00	0.00	0.00
INSURANCE & SURETY BONDS	240,000.00	539.00	0.00	539.00
OFFICE SUPPLIES	24,500.00	593.54	710.78	607.55
OTHER CONTRACTUAL SERVICES	12,800.00	1,364.84	1,413.09	2,644.42
Total Expenditures	**$334,300.00**	**$5,621.90**	**$5,215.08**	**$17,415.21**
LIBRARY EMP. BENEFIT EXPENDITU				
NEIGHBORHOOD REVIT REBATE	0.00	0.00	0.00	0.00
OTHER CONTRACTUAL SERVICES	203,200.00	112,801.77	101,599.61	112,801.77
TAX INCREMENT FINANCING DIST	2,148.00	0.00	0.00	1,601.53
Total Expenditures	**$205,348.00**	**$112,801.77**	**$101,599.61**	**$114,403.30**
LIBRARY FUND EXPENDITURES				
NEIGHBORHOOD REVIT REBATE	0.00	0.00	0.00	0.00
OTHER CONTRACTUAL SERVICES	1,330,000.00	733,837.85	692,213.46	733,837.85
TAX INCREMENT FINANCING DIST	13,962.00	0.00	0.00	10,414.53
Total Expenditures	**$1,343,962.00**	**$733,837.85**	**$692,213.46**	**$744,252.38**
MUNICIPAL COURT				
INSURANCE & SURETY BONDS	0.00	0.00	0.00	0.00
NEW EQUIPMENT	0.00	0.00	0.00	0.00
OFFICE SUPPLIES	1,200.00	0.00	28.32	0.00
OTHER CONTRACTUAL SERVICES	6,700.00	228.66	450.34	529.89
OVERTIME	3,000.00	0.00	0.00	61.04
PROFESSIONAL SERVICES	35,000.00	2,863.00	1,800.00	4,663.00
PROJECTS	0.00	0.00	0.00	0.00
SAFE RIDE	0.00	0.00	0.00	0.00
SALARIES	116,565.00	8,508.44	8,196.03	22,118.36
TRAVEL & TRAINING	1,000.00	0.00	0.00	100.00
Total Expenditures	**$163,465.00**	**$11,600.10**	**$10,474.69**	**$27,472.29**
P.W.-GENERAL ADMINISTRATION				
COMMUNICATION	3,650.00	245.16	230.15	245.16
CONTINGENCY	5,000.00	0.00	160.00	0.00
GENERAL SUPPLIES & MATERIALS	5,000.00	118.06	246.34	118.06
OFFICE SUPPLIES	5,000.00	384.48	154.68	384.48
OTHER CONTRACTUAL SERVICES	2,200.00	0.00	0.00	0.00
OVERTIME	500.00	0.00	0.00	0.00
PROFESSIONAL SERVICES	30,000.00	0.00	1,932.00	0.00
PROJECTS	0.00	0.00	0.00	0.00
SALARIES	234,190.00	17,675.25	16,626.58	45,523.58
TRAVEL & TRAINING	8,000.00	129.01	339.76	129.01
Total Expenditures	**$293,540.00**	**$18,551.96**	**$19,689.51**	**$46,400.29**

Period (Month) = 2.00

	Budgeted 2016	Expenses Current Mo.	Expenses Current Mo. Previous Year	Current Year Expenses YTD
PARK DEVELOPMENT EXPENDITURES				
CONTINGENCY	5,027.00	0.00	0.00	0.00
OTHER CONTRACTUAL SERVICES	0.00	0.00	0.00	0.00
Total Expenditures	**$5,027.00**	**$0.00**	**$0.00**	**$0.00**
PARKS & PLAYGROUNDS				
BUILDINGS & STRUCTURES	0.00	0.00	0.00	0.00
CHEMICALS	18,000.00	0.00	0.00	270.40
COMMUNICATION	2,500.00	178.78	174.77	178.78
CONTINGENCY	5,000.00	25.63	143.06	25.63
ELECTRICITY	0.00	0.00	0.00	0.00
EQUIPMENT EXPENSE	12,000.00	506.34	2,638.79	744.05
EQUIPMENT EXPENSE	0.00	0.00	0.00	0.00
EQUIPMENT EXPENSE	0.00	5.95	0.00	90.87
EQUIPMENT EXPENSE	0.00	0.00	0.00	448.76
EQUIPMENT EXPENSE	0.00	0.00	0.00	720.67
EQUIPMENT EXPENSE	0.00	13.74	0.00	98.66
EQUIPMENT EXPENSE	0.00	185.03	0.00	185.03
GENERAL SUPPLIES & MATERIALS	48,500.00	6,793.92	2,250.52	10,661.39
LEGAL PUBLICATIONS & PRINTING	0.00	0.00	0.00	0.00
NATURAL GAS	0.00	0.00	0.00	0.00
NEW EQUIPMENT	7,600.00	2,314.50	3,172.42	4,937.50
OFFICE SUPPLIES	800.00	23.17	0.00	23.17
OTHER CONTRACTUAL SERVICES	24,000.00	9,911.42	1,254.06	10,703.76
OVERTIME	10,000.00	607.02	352.16	1,593.98
PROFESSIONAL SERVICES	0.00	0.00	0.00	0.00
PROJECTS	0.00	0.00	0.00	0.00
RENTALS	800.00	0.00	0.00	0.00
REPAIRS TO BLDGS & STRUCTURES	17,400.00	2,222.84	499.98	2,660.34
SALARIES	647,041.00	47,219.69	45,289.36	118,049.15
SEASONAL/PART TIME	97,900.00	0.00	0.00	0.00
TRAVEL & TRAINING	4,000.00	451.11	88.81	451.11
UNIFORMS	5,100.00	382.85	346.69	739.81
Total Expenditures	**$900,641.00**	**$70,841.99**	**$56,210.62**	**$152,583.06**
PARKS IMPROVEMENT FUND-EXPEND				
OTHER CONTRACTUAL SERVICES	0.00	0.00	7,200.00	0.00
PROJECTS	0.00	(2,113.46)	0.00	-1,870.31
Total Expenditures	**$0.00**	**($2,113.46)**	**$7,200.00**	**-$1,870.31**
PLANNING INSPECTION ENFORCEMEN				
COMMUNICATION	7,500.00	333.38	336.25	333.38
EQUIPMENT EXPENSE	3,800.00	0.00	0.00	0.00
GENERAL SUPPLIES & MATERIALS	1,500.00	78.30	0.00	78.30
LEGAL PUBLICATIONS & PRINTING	0.00	0.00	0.00	0.00
NEW EQUIPMENT	0.00	0.00	0.00	0.00
OFFICE SUPPLIES	0.00	0.00	0.00	0.00
OTHER CONTRACTUAL SERVICES	10,000.00	237.30	205.08	325.30
OVERTIME	8,000.00	0.00	78.05	158.73
PROFESSIONAL SERVICES	0.00	0.00	0.00	0.00
PROJECTS	0.00	0.00	0.00	0.00
SALARIES	357,449.00	20,930.00	21,132.21	50,378.10
SEASONAL/PART TIME	11,590.00	953.75	1,172.64	2,657.79
TRAVEL & TRAINING	25,000.00	428.32	297.52	428.32
UNIFORMS	1,200.00	0.00	0.00	0.00
Total Expenditures	**$426,039.00**	**$22,961.05**	**$23,221.75**	**$54,359.92**

	Budgeted 2016	Expenses Current Mo.	Expenses Current Mo. Previous Year	Current Year Expenses YTD
POLICE DEPARTMENT				
COMMUNICATION	15,600.00	787.92	642.37	787.92
CONTINGENCY	5,000.00	225.00	625.00	225.00
ELECTRICITY	0.00	0.00	0.00	0.00
EQUIPMENT EXPENSE	14,750.00	963.44	424.62	2,587.17
EQUIPMENT EXPENSE	0.00	0.00	0.00	0.00
EQUIPMENT EXPENSE	0.00	0.00	0.00	0.00
EQUIPMENT EXPENSE	0.00	0.00	0.00	0.00
EQUIPMENT EXPENSE	0.00	0.00	0.00	0.00
EQUIPMENT EXPENSE	0.00	0.00	0.00	0.00
EQUIPMENT EXPENSE	0.00	0.00	0.00	0.00
EQUIPMENT EXPENSE	0.00	0.00	0.00	0.00
EQUIPMENT EXPENSE	0.00	0.00	0.00	0.00
EQUIPMENT EXPENSE	0.00	0.00	0.00	0.00
EQUIPMENT EXPENSE	0.00	0.00	0.00	0.00
EQUIPMENT EXPENSE	0.00	0.00	0.00	0.00
EQUIPMENT EXPENSE	0.00	0.00	0.00	0.00
EQUIPMENT EXPENSE	0.00	0.00	0.00	0.00
EQUIPMENT EXPENSE	0.00	0.00	0.00	0.00
EQUIPMENT EXPENSE	0.00	0.00	0.00	0.00
EQUIPMENT EXPENSE	0.00	0.00	0.00	0.00
EQUIPMENT EXPENSE	0.00	0.00	0.00	0.00
EQUIPMENT EXPENSE	0.00	0.00	0.00	0.00
EQUIPMENT EXPENSE	0.00	0.00	0.00	0.00
EQUIPMENT EXPENSE	0.00	0.00	0.00	0.00
EQUIPMENT EXPENSE	0.00	0.00	0.00	0.00
EQUIPMENT EXPENSE	0.00	0.00	0.00	0.00
EQUIPMENT EXPENSE	0.00	0.00	0.00	0.00
EQUIPMENT EXPENSE	0.00	0.00	0.00	0.00
EQUIPMENT EXPENSE	0.00	0.00	0.00	0.00
EQUIPMENT EXPENSE	0.00	0.00	0.00	0.00
EQUIPMENT EXPENSE	0.00	0.00	0.00	0.00
EQUIPMENT EXPENSE	0.00	0.00	0.00	0.00
EQUIPMENT EXPENSE	0.00	0.00	0.00	0.00
EQUIPMENT EXPENSE	0.00	0.00	0.00	0.00
EQUIPMENT EXPENSE	0.00	0.00	0.00	0.00
EQUIPMENT EXPENSE	0.00	0.00	0.00	0.00
EQUIPMENT EXPENSE	0.00	0.00	0.00	0.00
EQUIPMENT EXPENSE	0.00	0.00	0.00	0.00
GENERAL SUPPLIES & MATERIALS	23,000.00	1,719.92	3,476.09	3,545.36
GRANT FUNDING	0.00	0.00	0.00	0.00
LEGAL PUBLICATIONS & PRINTING	6,300.00	553.95	45.22	553.95
NEW EQUIPMENT	0.00	0.00	0.00	0.00
OFFICE SUPPLIES	2,000.00	173.13	193.65	173.13
OTHER CONTRACTUAL SERVICES	52,800.00	2,638.07	2,383.88	3,593.07
OVERTIME	145,000.00	10,506.97	3,726.50	37,073.40
PROFESSIONAL SERVICES	18,500.00	75.00	150.00	75.00
PROJECTS	0.00	0.00	0.00	0.00
RENTALS	0.00	0.00	0.00	0.00
SALARIES	1,799,773.00	122,426.16	129,590.50	311,834.16
TRAVEL & TRAINING	40,000.00	1,438.97	2,980.43	1,438.97
UNIFORMS	15,500.00	869.07	476.34	1,941.07
Total Expenditures	**$2,138,223.00**	**$142,377.60**	**$144,714.60**	**$363,828.20**

Period (Month) = 2.00

	Budgeted 2016	Expenses Current Mo.	Expenses Current Mo. Previous Year	Current Year Expenses YTD
PUBLIC WORKS-SERVICE DIVISION				
COMMUNICATION	1,400.00	126.86	165.31	126.86
ELECTRICITY	0.00	0.00	0.00	0.00
EQUIPMENT EXPENSE	48,000.00	9.70	61.60	864.98
GENERAL SUPPLIES & MATERIALS	250,000.00	23,170.48	3,815.71	31,494.52
GRANT FUNDING	0.00	0.00	0.00	0.00
LEGAL PUBLICATIONS & PRINTING	0.00	0.00	0.00	0.00
NATURAL GAS	0.00	0.00	0.00	0.00
NEW EQUIPMENT	5,100.00	0.00	0.00	0.00
OFFICE SUPPLIES	0.00	0.00	0.00	0.00
OTHER CONTRACTUAL SERVICES	15,000.00	3,045.00	999.30	3,858.72
OVERTIME	15,900.00	4,804.38	67.10	5,298.07
PROFESSIONAL SERVICES	0.00	0.00	0.00	0.00
PROJECTS	25,000.00	0.00	0.00	2,625.00
RENTALS	2,500.00	149.25	571.50	149.25
REPAIRS TO BLDGS & STRUCTURES	0.00	0.00	130.00	0.00
SALARIES	549,780.00	39,343.81	36,841.17	98,094.47
SEASONAL/PART TIME	0.00	0.00	0.00	0.00
TRANSFERS	0.00	0.00	0.00	0.00
TRAVEL & TRAINING	6,700.00	1,170.00	437.69	1,170.00
UNIFORMS	6,820.00	444.41	485.61	828.57
Total Expenditures	**$926,200.00**	**$72,263.89**	**$43,574.99**	**$144,510.44**
QUALITY OF LIFE				
OTHER CONTRACTUAL SERVICES	0.00	0.00	0.00	0.00
Total Expenditures	**$0.00**	**$0.00**	**$0.00**	**$0.00**
RISK MGT. FUND EXPENDITURES				
CONTINGENCY	0.00	0.00	0.00	0.00
OTHER CONTRACTUAL SERVICES	0.00	0.00	0.00	0.00
TRANSFER TO EMPLOYEE BENEFIT	0.00	0.00	0.00	0.00
Total Expenditures	**$0.00**	**$0.00**	**$0.00**	**$0.00**
SOCIAL SERVICES				
OTHER CONTRACTUAL SERVICES	164,000.00	0.00	0.00	82,000.00
TRANSFERS	0.00	0.00	0.00	0.00
Total Expenditures	**$164,000.00**	**$0.00**	**$0.00**	**$82,000.00**

	Budgeted 2016	Expenses Current Mo.	Expenses Current Mo. Previous Year	Current Year Expenses YTD
SOLID WASTE FUND EXPENDITURE				
COMMUNICATION	1,300.00	84.29	74.87	84.29
CONTINGENCY	50,000.00	0.00	0.00	0.00
DEBT SERVICES	0.00	0.00	0.00	0.00
DEPRECIATION EXPENSE	0.00	0.00	0.00	0.00
ELECTRICITY	4,500.00	0.00	338.67	299.45
EQUIPMENT EXPENSE	10,900.00	279.01	814.57	279.01
GENERAL SUPPLIES & MATERIALS	23,240.00	639.39	348.04	639.39
LEGAL PUBLICATIONS & PRINTING	2,200.00	0.00	0.00	0.00
NATURAL GAS	2,200.00	0.00	532.31	387.80
NEW EQUIPMENT	0.00	0.00	0.00	0.00
OFFICE SUPPLIES	550.00	0.00	39.11	0.00
OTHER CONTRACTUAL SERVICES	398,692.00	25,677.80	28,311.66	27,837.02
OVERTIME	5,500.00	0.00	23.48	1,003.49
PROFESSIONAL SERVICES	0.00	0.00	0.00	0.00
PROJECTS	0.00	0.00	0.00	0.00
RENTALS	0.00	0.00	0.00	0.00
REPAIRS TO BLDGS & STRUCTURES	3,600.00	515.19	105.90	515.19
SALARIES	365,102.00	25,287.44	25,663.00	63,395.15
SEASONAL/PART TIME	0.00	0.00	0.00	0.00
TRANSFER TO EMPLOYEE BENEFIT	180,470.00	0.00	0.00	0.00
TRANSFER TO GENERAL FUND	228,600.00	0.00	0.00	0.00
TRANSFER TO RESERVES	109,900.00	0.00	0.00	0.00
TRANSFER TO WATER/SEWER FUND	0.00	0.00	0.00	0.00
TRANSFERS	0.00	0.00	0.00	0.00
TRAVEL & TRAINING	800.00	0.00	0.00	-4.88
UNIFORMS	4,400.00	326.56	220.73	714.43
UTILITY-WATER	410.00	0.00	47.60	0.00
Total Expenditures	**$1,392,364.00**	**$52,809.68**	**$56,519.94**	**$95,150.34**
SPECIAL ALCOHOL FUND EXPENDITU				
CONTINGENCY	73,325.00	0.00	0.00	0.00
OTHER CONTRACTUAL SERVICES	60,000.00	0.00	0.00	30,000.00
TRANSFER TO EMPLOYEE BENEFIT	24,812.00	0.00	0.00	0.00
TRANSFER TO GENERAL FUND	48,014.00	0.00	0.00	0.00
TRANSFERS	0.00	0.00	0.00	0.00
Total Expenditures	**$206,151.00**	**$0.00**	**$0.00**	**$30,000.00**

Period (Month) = 2.00

	Budgeted 2016	Expenses Current Mo.	Expenses Current Mo. Previous Year	Current Year Expenses YTD
SPECIAL HIGHWAY EXPENDITURES				
2001 SIDEWALK RAMPS	0.00	0.00	0.00	0.00
BUDGETED CAPITAL PROJECTS	1,122,237.00	0.00	0.00	0.00
BUDGETED CAPITAL PROJECTS	0.00	0.00	0.00	0.00
BUDGETED CAPITAL PROJECTS	0.00	0.00	0.00	0.00
BUDGETED CAPITAL PROJECTS	0.00	0.00	0.00	0.00
BUDGETED CAPITAL PROJECTS	0.00	0.00	0.00	0.00
BUDGETED CAPITAL PROJECTS	0.00	0.00	0.00	0.00
BUDGETED CAPITAL PROJECTS	0.00	0.00	0.00	0.00
BUDGETED CAPITAL PROJECTS	0.00	0.00	0.00	0.00
BUDGETED CAPITAL PROJECTS	0.00	0.00	0.00	0.00
BUDGETED CAPITAL PROJECTS	0.00	0.00	0.00	0.00
BUDGETED CAPITAL PROJECTS	0.00	0.00	0.00	0.00
BUDGETED CAPITAL PROJECTS	0.00	0.00	0.00	0.00
BUDGETED CAPITAL PROJECTS	0.00	0.00	0.00	0.00
CONTINGENCY	50,000.00	0.00	0.00	0.00
CORR MGT - GENERAL HAYS RD.	0.00	0.00	0.00	0.00
CORR MGT-REVERSE ACCESS 48-55	0.00	0.00	0.00	0.00
OTHER CONTRACTUAL SERVICES	0.00	0.00	0.00	0.00
TRANSFER TO BOND & INTEREST	0.00	0.00	0.00	0.00
TRANSFER TO EMPLOYEE BENEFIT	0.00	0.00	0.00	0.00
TRANSFER TO GENERAL FUND	0.00	0.00	0.00	0.00
TRANSFER TO WATER/SEWER FUND	0.00	0.00	0.00	0.00
TRANSFERS	0.00	0.00	0.00	0.00
VINE ST.-MILL & OVERLAY--13/27	0.00	0.00	0.00	0.00
Total Expenditures	**$1,172,237.00**	**$0.00**	**$0.00**	**$0.00**
SPECIAL PRK & REC EXPENDITURES				
BUILDINGS & STRUCTURES	0.00	0.00	0.00	0.00
CONTINGENCY	0.00	0.00	0.00	0.00
NEW EQUIPMENT	0.00	0.00	0.00	0.00
OTHER CONTRACTUAL SERVICES	0.00	0.00	0.00	0.00
PROJECTS	336,915.00	519.00	5,376.00	1,169.00
TRANSFER TO NEW EQUIP. RESERVE	0.00	0.00	0.00	0.00
Total Expenditures	**$336,915.00**	**$519.00**	**$5,376.00**	**$1,169.00**
SPORTS COMPLEX-EXPENDITURES				
OTHER CONTRACTUAL SERVICES	0.00	0.00	0.00	0.00
PROFESSIONAL SERVICES	0.00	0.00	0.00	0.00
TRANSFER TO EMPLOYEE BENEFIT	0.00	0.00	0.00	0.00
TRANSFER TO GENERAL FUND	0.00	0.00	0.00	0.00
Total Expenditures	**$0.00**	**$0.00**	**$0.00**	**$0.00**
STORMWATER MANAGEMENT EXPENDIT				
COMMUNICATION	900.00	73.45	65.22	73.45
CONTINGENCY	50,000.00	500.00	910.00	500.00
DEBT SERVICES	250,000.00	0.00	0.00	0.00
GENERAL SUPPLIES & MATERIALS	57,500.00	0.00	0.00	0.00
NEW EQUIPMENT	0.00	0.00	0.00	0.00
OFFICE SUPPLIES	0.00	0.00	0.00	0.00
OTHER CONTRACTUAL SERVICES	10,000.00	0.00	0.00	0.00
PROFESSIONAL SERVICES	55,000.00	0.00	0.00	0.00
PROJECTS	0.00	0.00	0.00	0.00
SALARIES	53,663.00	4,050.00	3,970.16	10,125.00
TRANSFER TO EMPLOYEE BENEFIT	21,771.00	0.00	0.00	0.00
TRANSFER TO GENERAL FUND	65,674.00	0.00	0.00	0.00
TRANSFER TO NEW EQUIP. RESERVE	0.00	0.00	0.00	0.00
TRANSFER TO RESERVES	294,092.00	0.00	0.00	0.00
TRAVEL & TRAINING	2,500.00	82.20	0.00	94.37
UNIFORMS	200.00	0.00	0.00	0.00
Total Expenditures	**$861,300.00**	**$4,705.65**	**$4,945.38**	**$10,792.82**

	Budgeted 2016	Expenses Current Mo.	Expenses Current Mo. Previous Year	Current Year Expenses YTD
SWIMMING POOL				
BUILDINGS & STRUCTURES	0.00	0.00	0.00	0.00
CHEMICALS	35,000.00	887.50	0.00	887.50
ELECTRICITY	0.00	0.00	0.00	0.00
EQUIPMENT EXPENSE	10,000.00	0.00	361.11	0.00
GENERAL SUPPLIES & MATERIALS	8,000.00	0.00	0.00	408.84
INSURANCE & SURETY BONDS	0.00	0.00	0.00	0.00
LEGAL PUBLICATIONS & PRINTING	0.00	0.00	0.00	0.00
NATURAL GAS	0.00	0.00	0.00	0.00
NEW EQUIPMENT	1,100.00	0.00	288.69	0.00
OTHER CONTRACTUAL SERVICES	29,000.00	0.00	177.99	309.92
PROJECTS	0.00	0.00	0.00	0.00
RENTALS	0.00	0.00	0.00	0.00
REPAIRS TO BLDGS & STRUCTURES	17,600.00	4,427.61	904.97	11,107.61
TRAVEL & TRAINING	0.00	0.00	0.00	0.00
Total Expenditures	**$100,700.00**	**$5,315.11**	**$1,732.76**	**$12,713.87**
TDD SLS TAX EXPENDITURES				
OTHER CONTRACTUAL SERVICES	0.00	17,145.67	4,005.91	37,759.99
Total Expenditures	**$0.00**	**$17,145.67**	**$4,005.91**	**$37,759.99**
THE MALL CID-EXPENDITURES				
OTHER CONTRACTUAL SERVICES	0.00	0.00	2,805.00	0.00
Total Expenditures	**$0.00**	**$0.00**	**$2,805.00**	**$0.00**
UTILITIES DEPT./WATER CONSERV.				
COMMUNICATION	0.00	12.69	30.85	12.69
GENERAL SUPPLIES & MATERIALS	0.00	0.00	0.00	0.00
GRANT FUNDING	0.00	0.00	0.00	0.00
LEGAL PUBLICATIONS & PRINTING	0.00	0.00	0.00	0.00
NEW EQUIPMENT	0.00	0.00	0.00	0.00
OFFICE SUPPLIES	0.00	0.00	0.00	0.00
OTHER CONTRACTUAL SERVICES	0.00	0.00	0.00	0.00
OVERTIME	0.00	0.00	0.00	0.00
PROJECTS	0.00	0.00	2,148.31	0.00
SALARIES	0.00	0.00	4,009.88	0.00
TRANSFER TO EMPLOYEE BENEFIT	0.00	0.00	0.00	0.00
TRANSFER TO NEW EQUIP. RESERVE	0.00	0.00	0.00	0.00
TRAVEL & TRAINING	0.00	0.00	23.73	0.00
UNIFORMS	0.00	0.00	0.00	0.00
Total Expenditures	**$0.00**	**$12.69**	**$6,212.77**	**$12.69**
W/S NON-OPERATING EXPENDITURES				
CAPITAL EXPENDITURES	0.00	0.00	0.00	0.00
CLEAN DRINKING WATER FEE	0.00	0.00	4,109.40	0.00
CONTINGENCY	0.00	0.00	330.50	0.00
GRANT FUNDING	0.00	0.00	0.00	0.00
INTEREST ON METER DEPOSITS	0.00	(86.71)	21.89	0.00
OTHER CONTRACTUAL SERVICES	0.00	(1,468.36)	1,531.31	153.70
PROJECTS	0.00	0.00	0.00	0.00
R-9 RANCH EXPENDITURES	0.00	0.00	21,598.00	0.00
TRANSFER TO BOND & INTEREST	0.00	0.00	0.00	0.00
TRANSFER TO CAPITAL IMPROVEMEN	0.00	0.00	0.00	0.00
TRANSFER TO EMPLOYEE BENEFIT	0.00	0.00	0.00	0.00
TRANSFER TO GENERAL FUND	0.00	0.00	0.00	0.00
TRANSFER TO NEW EQUIP. RESERVE	0.00	0.00	0.00	0.00
TRANSFER TO STORMWATER MGT	0.00	0.00	0.00	0.00
TRANSFER-SALES TAX RESERVE	0.00	0.00	0.00	0.00
TRNSF TO GEN. FROM WA SLS TX	0.00	0.00	0.00	0.00
WATER TAPS, HYDRANTS, METERS	0.00	0.00	694.72	0.00
Total Expenditures	**$0.00**	**($1,555.07)**	**$28,285.82**	**$153.70**

Period (Month) = 2.00

	Budgeted 2016	Expenses Current Mo.	Expenses Current Mo. Previous Year	Current Year Expenses YTD
WA CONSERV EXPENDITU				
COMMUNICATION	500.00	17.30	0.00	17.30
GENERAL SUPPLIES & MATERIALS	2,500.00	50.00	0.00	50.00
GRANT FUNDING	5,000.00	0.00	0.00	0.00
LEGAL PUBLICATIONS & PRINTING	2,000.00	31.00	0.00	31.00
NEW EQUIPMENT	0.00	0.00	0.00	0.00
OFFICE SUPPLIES	0.00	0.00	0.00	0.00
OTHER CONTRACTUAL SERVICES	2,500.00	0.00	0.00	0.00
OVERTIME	0.00	0.00	0.00	0.00
PROJECTS	223,000.00	4,549.05	0.00	5,599.05
R-9 RANCH EXPENDITURES	230,000.00	0.00	0.00	15,529.44
SALARIES	54,178.00	4,088.94	0.00	10,222.35
TRANSFER TO EMPLOYEE BENEFIT	24,938.00	0.00	0.00	0.00
TRANSFER TO NEW EQUIP. RESERVE	1,345.00	0.00	0.00	0.00
TRANSFER-SALES TAX RESERVE	2,276,779.00	0.00	0.00	0.00
TRAVEL & TRAINING	2,000.00	12.20	0.00	24.37
TRNSF TO GEN. FROM WA SLS TX	555,353.00	0.00	0.00	0.00
UNIFORMS	200.00	0.00	0.00	0.00
Total Expenditures	**$3,380,293.00**	**$8,748.49**	**$0.00**	**$31,473.51**
WA SLS TX RESERVE EXPENDITURES				
NEW EQUIPMENT	0.00	0.00	0.00	0.00
OTHER CONTRACTUAL SERVICES	0.00	7,930.18	0.00	15,750.11
PROFESSIONAL SERVICES	0.00	48,987.24	0.00	76,143.85
TRAVEL & TRAINING	0.00	110.70	0.00	1,843.63
Total Expenditures	**$0.00**	**$57,028.12**	**$0.00**	**$93,737.59**
WASTE WATER FUND EXPENDITURES				
CHEMICALS	69,572.00	2,816.00	0.00	7,708.00
COMMUNICATION	3,100.00	174.94	0.00	174.94
CONTINGENCY	25,000.00	0.00	0.00	0.00
ELECTRICITY	199,732.00	15,414.30	0.00	31,764.86
EQUIPMENT EXPENSE	112,400.00	4,885.58	0.00	8,649.95
GENERAL SUPPLIES & MATERIALS	30,000.00	3,428.94	0.00	3,782.81
INT-REVENUE BND PAYMENT 2009A	36,329.00	0.00	0.00	0.00
NATURAL GAS	27,780.00	218.65	0.00	2,358.74
OFFICE SUPPLIES	650.00	183.14	0.00	183.14
OTHER CONTRACTUAL SERVICES	156,000.00	1,846.31	0.00	1,906.31
OVERTIME	17,000.00	1,095.58	0.00	2,665.38
PRINCIPAL & INT. REVOLVING LOA	0.00	0.00	0.00	0.00
PROFESSIONAL SERVICES	30,198.00	1,399.50	0.00	1,399.50
PROJECTS	30,000.00	0.00	0.00	0.00
REPAIRS TO BLDGS & STRUCTURES	30,000.00	0.00	0.00	0.00
REV BOND PAYMENT 2009-A	90,000.00	0.00	0.00	0.00
SALARIES	446,580.00	34,202.34	0.00	84,431.21
SEASONAL/PART TIME	26,153.00	290.41	0.00	1,161.64
TRANSFER TO CAPITAL IMPROVEMEN	600,000.00	0.00	0.00	0.00
TRANSFER TO EMPLOYEE BENEFIT	147,869.00	0.00	0.00	0.00
TRANSFER TO GENERAL FUND	468,390.00	0.00	0.00	0.00
TRANSFER TO NEW EQUIP. RESERVE	25,721.00	0.00	0.00	0.00
TRAVEL & TRAINING	5,000.00	73.23	0.00	86.12
UNIFORMS	5,000.00	475.05	0.00	742.69
Total Expenditures	**$2,582,474.00**	**$66,503.97**	**$0.00**	**$147,015.29**

	Budgeted 2016	Expenses Current Mo.	Expenses Current Mo. Previous Year	Current Year Expenses YTD
WASTEWATER TREATMENT & COLL.				
CHEMICALS	0.00	0.00	4,453.68	0.00
COMMUNICATION	0.00	0.00	194.73	0.00
ELECTRICITY	0.00	0.00	200.06	0.00
EQUIPMENT EXPENSE	0.00	0.00	1,896.67	0.00
GENERAL SUPPLIES & MATERIALS	0.00	0.00	2,304.23	0.00
LEGAL PUBLICATIONS & PRINTING	0.00	0.00	0.00	0.00
NATURAL GAS	0.00	0.00	1,972.11	0.00
OFFICE SUPPLIES	0.00	0.00	154.63	0.00
OTHER CONTRACTUAL SERVICES	0.00	0.00	1,209.67	0.00
OVERTIME	0.00	0.00	427.12	0.00
PROFESSIONAL SERVICES	0.00	0.00	719.00	0.00
PROJECTS	0.00	0.00	0.00	0.00
REPAIRS TO BLDGS & STRUCTURES	0.00	0.00	0.00	0.00
SALARIES	0.00	0.00	32,958.07	0.00
SEASONAL/PART TIME	0.00	0.00	668.50	0.00
TRAVEL & TRAINING	0.00	0.00	1,210.89	0.00
UNIFORMS	0.00	0.00	298.37	0.00
Total Expenditures	**$0.00**	**$0.00**	**$48,667.73**	**$0.00**
WATER FUND EXPENDITURES				
CHEMICALS	525,213.00	27,739.45	0.00	53,455.50
CLEAN DRINKING WATER FEE	20,000.00	4,305.09	0.00	4,305.09
COMMUNICATION	5,490.00	277.28	0.00	277.28
CONTINGENCY	25,000.00	77.95	0.00	77.95
ELECTRICITY	286,728.00	20,083.62	0.00	39,901.13
EQUIPMENT EXPENSE	99,424.00	4,938.14	0.00	9,956.83
GENERAL SUPPLIES & MATERIALS	42,000.00	5,165.40	0.00	5,165.40
INT-REVENUE BND PAYMENT 2009A	84,767.00	0.00	0.00	0.00
INTEREST ON METER DEPOSITS	250.00	175.74	0.00	264.64
LEGAL PUBLICATIONS & PRINTING	2,000.00	0.00	0.00	0.00
NATURAL GAS	12,575.00	321.62	0.00	1,621.57
OFFICE SUPPLIES	1,150.00	90.53	0.00	90.53
OTHER CONTRACTUAL SERVICES	53,178.00	12,023.45	0.00	12,023.45
OVERTIME	22,000.00	1,316.77	0.00	4,562.24
PROFESSIONAL SERVICES	15,540.00	2,638.00	0.00	2,638.00
PROJECTS	10,000.00	0.00	0.00	0.00
REPAIRS TO BLDGS & STRUCTURES	4,775.00	119.61	0.00	119.61
REV BOND PAYMENT 2009-A	210,000.00	0.00	0.00	0.00
SALARIES	590,099.00	43,059.53	0.00	105,709.79
SEASONAL/PART TIME	15,163.00	684.01	0.00	1,263.18
TRANSFER TO CAPITAL IMPROVEMEN	500,000.00	0.00	0.00	0.00
TRANSFER TO EMPLOYEE BENEFIT	345,027.00	0.00	0.00	0.00
TRANSFER TO GENERAL FUND	546,354.00	0.00	0.00	0.00
TRANSFER TO NEW EQUIP. RESERVE	25,721.00	0.00	0.00	0.00
TRAVEL & TRAINING	5,000.00	113.00	0.00	113.00
UNIFORMS	5,000.00	312.91	0.00	650.88
WATER TAPS, HYDRANTS, METERS	150,000.00	3,929.51	0.00	8,711.55
Total Expenditures	**$3,602,454.00**	**$127,371.61**	**$0.00**	**$250,907.62**

	Budgeted 2016	Expenses Current Mo.	Expenses Current Mo. Previous Year	Current Year Expenses YTD
WATER PRODUCTION & DIST.				
CHEMICALS	0.00	0.00	31,300.01	0.00
COMMUNICATION	0.00	65.90	289.69	65.90
ELECTRICITY	0.00	0.00	2,648.75	0.00
EQUIPMENT EXPENSE	0.00	0.00	2,437.06	0.00
GENERAL SUPPLIES & MATERIALS	0.00	0.00	1,204.10	0.00
INSURANCE & SURETY BONDS	0.00	0.00	0.00	0.00
LEGAL PUBLICATIONS & PRINTING	0.00	0.00	250.00	0.00
NATURAL GAS	0.00	0.00	0.00	0.00
OFFICE SUPPLIES	0.00	0.00	802.56	0.00
OTHER CONTRACTUAL SERVICES	0.00	0.00	8,114.38	0.00
OVERTIME	0.00	0.00	2,864.34	0.00
PROFESSIONAL SERVICES	0.00	0.00	469.25	0.00
PROJECTS	0.00	0.00	0.00	0.00
RENTALS	0.00	0.00	0.00	0.00
REPAIRS TO BLDGS & STRUCTURES	0.00	0.00	520.79	0.00
SALARIES	0.00	0.00	40,372.82	0.00
SEASONAL/PART TIME	0.00	0.00	693.60	0.00
TRAVEL & TRAINING	0.00	0.00	179.50	0.00
UNIFORMS	0.00	0.00	495.19	0.00
Total Expenditures	**$0.00**	**$65.90**	**$92,642.04**	**$65.90**
Grand Totals	**$44,557,990.42**	**$2,687,824.08**	**$2,457,522.71**	**$5,246,772.44**

Period (Month) = 2.00

CITY OF HAYS
AGENDA ITEM COVER SHEET

COMMISSION AGENDA ITEM NO. 5A **MEETING DATE: 3-24-16**

TOPIC:

Mayoral Appointments for Approval

ACTION REQUESTED:

Consider approving Mayor Phelps' proposed appointments to the CARE Council and the Sister Cities Advisory Board.

NARRATIVE:

The following appointments were recommended at the March 10, 2016 City Commission meeting and are now being presented for approval.

CARE Council

Holly Haynes – 2-year term to expire 3-1-18 (1st term)

Sister Cities Advisory Board

Heather Musil – unexpired term to expire 1-1-18 (1st term)

PERSON/STAFF MEMBER(S) MAKING PRESENTATION:

Mayor Phelps

ADMINISTRATION RECOMMENDATION:

N/A

COMMITTEE RECOMMENDATION(S):

N/A

ATTACHMENTS:

Applications

CITY OF HAYS
APPLICATION FOR SERVING ON A CITY BOARD OR COMMITTEE

Email: hhaynes@mwenergy.com

Date: 3/4/2016

Name: Holly Haynes

Address: 2920 Skyline Drive, Hays, KS 67601

Day Time Phone Number: 785-650-2552

Evening Phone Number: 785-639-1138

Place of Employment: Midwest Energy, Inc.

How long have you been a Resident of Hays: 2 Years 7 Months

Name of Board(s) you are interested in serving on: United Way CARE Council

How much time could you devote per month: As Needed

Are you related to anyone who is currently serving on a Board/Committee?: No

If Yes, Explain:

Briefly describe why you are interested in serving on a Board/Committee for the City of Hays: I am currently serving on the United Way Board and would like to increase my role. By becoming more involved in this committee I will learn more about our member agency companies and how we allocate funds. The more I involve myself the better I am able to serve in a Board Member capacity.

Please list any groups or activities that you participate in, or have previously participated in, that demonstrates your involvement in the community: I am a Hays Area Chamber Ambassador, serve on the Downtown Hays Development Corporation Board, and I am also a member of the Hays Rec Commission Run Club.

CITY OF HAYS
APPLICATION FOR SERVING ON A CITY BOARD OR COMMITTEE

Email: hmusil@usd489.com

Date: 6/15/2015

Name: Heather Musil

Address: 3319 Willow Hays, KS

Day Time Phone Number: 785-623-8970

Evening Phone Number: 785-623-8970

Place of Employment: USD 489 teacher at Hays Middle School

How long have you been a Resident of Hays: I've been a resident of Hays since 1995, so 20 years.

Name of Board(s) you are interested in serving on: Care Council and Sister Cities

How much time could you devote per month: varies; 5-10 hours

Are you related to anyone who is currently serving on a Board/Committee?: No

If Yes, Explain:

Briefly describe why you are interested in serving on a Board/Committee for the City of Hays: As a teacher, I work directly with children and their families who are in need of services which are provided through the Care Council. As for the Sister Cities, I have traveled to Paraguay and love the culture. There are so many opportunities to share and learn through these cultures.

Please list any groups or activities that you participate in, or have previously participated in, that demonstrates your involvement in the community: I am on two church boards at First United Methodist Church, a member of PEO, a member of Teamin' up for Tots (Angel Tree), and volunteer in my children's classrooms.

CITY OF HAYS
AGENDA ITEM COVER SHEET

COMMISSION AGENDA ITEM NO. 5B **MEETING DATE: 3-24-16**

TOPIC:

Mayoral Appointment Recommendations

ACTION REQUESTED:

Receive Mayor Phelps' proposed appointments to the Building Trades Board, Hays Area Board of Zoning Appeals, and Hays Area Planning Commission.

NARRATIVE:

The following proposed appointments will be presented for approval at the April 14, 2016 City Commission meeting.

Building Trades Board

Katherine Burnett (General Contractor) – unexpired term to expire 8-27-19 (3rd term – non-consecutive)

Hays Area Board of Zoning Appeals

Louis Caplan (Planning Commission Rep) (lives in the city limits) – 3-year term to expire 5-1-19 (6th term)
Rich Sieker (lives in city limits) – 3-year term to expire 5-1-19 (2nd term)

Hays Area Planning Commission

Louis Caplan (lives in city limits) – 3-year term to expire 4-30-19 (6th term)
Lawrence Gould (lives in city limits) – unexpired term to expire 4-30-17 (11th term – non-consecutive)
Matthew Wheeler (lives in 3-mile limit) – 3-year term to expire 4-30-19 (2nd term)

PERSON/STAFF MEMBER(S) MAKING PRESENTATION:

Mayor Phelps

ADMINISTRATION RECOMMENDATION:

N/A

COMMITTEE RECOMMENDATION(S):

N/A

ATTACHMENTS:

Applications received for these Boards

CITY OF HAYS
APPLICATION FOR SERVING ON A CITY BOARD OR COMMITTEE

Email: KATHERINE@COVENANTBUILDERS.NET

Date: 3/8/2016

Name: Katherine E. Burnett

Address: 4101 Covenant Dr.

Day Time Phone Number: 785-628-6060

Evening Phone Number:

Place of Employment: Covenant Builders, Inc.

How long have you been a Resident of Hays: 14 years

Name of Board(s) you are interested in serving on: Trades Board

How much time could you devote per month: 10 Hours

Are you related to anyone who is currently serving on a Board/Committee?: No

If Yes, Explain:

Briefly describe why you are interested in serving on a Board/Committee for the City of Hays: I am interested in contributing in any way with the knowledge I have gained through my profession over the last 14 years.

Please list any groups or activities that you participate in, or have previously participated in, that demonstrates your involvement in the community: Trades Board Downtown Revitalization Committee BOD CASA of the High Plains Treasurer for Hays Victory Christian Academy

in City limits

CITY OF HAYS
APPLICATION FOR SERVING ON A CITY BOARD OR COMMITTEE

Email: lcaplan@fhsu.edu

Date: 3/2/2016

Name: Louis Caplan

Address: 2003 Main Street

Day Time Phone Number: 785-628-2677

Evening Phone Number: 785-628-2677

Place of Employment: Retired from FHSU

How long have you been a Resident of Hays: 46 years

Name of Board(s) you are interested in serving on: Planning Commission and Board of Zoning Appeals

How much time could you devote per month: as much as needed within limits

Are you related to anyone who is currently serving on a Board/Committee?: No

If Yes, Explain:

Briefly describe why you are interested in serving on a Board/Committee for the City of Hays: I have served on planning for 3 or 4 terms and during these terms I was also the liaison with zoning. If the city believes that my service is worthwhile, I am willing to continue on both.

Please list any groups or activities that you participate in, or have previously participated in, that demonstrates your involvement in the community: I am presently on the board of the Hays Public Library Trust Board and the board of Smoky Hill Public TV.

CITY OF HAYS
APPLICATION FOR SERVING ON A CITY BOARD OR COMMITTEE

Email: rsieker@eaglecom.net

Date: 2/17/2016

Name: Rich Sieker

Address: 3601 A. Fairway

Day Time Phone Number: 7854831840

Evening Phone Number: 7854831840

Place of Employment: Eagle

How long have you been a Resident of Hays: 7yrs

Name of Board(s) you are interested in serving on: Hays Board of Zoning

How much time could you devote per month: As long as it takes

Are you related to anyone who is currently serving on a Board/Committee?: No

If Yes, Explain:

Briefly describe why you are interested in serving on a Board/Committee for the City of Hays: Enjoy being on the present board.

Please list any groups or activities that you participate in, or have previously participated in, that demonstrates your involvement in the community: FHSU Alumni Board. FHSU Athletic Auction Comm. Ellis County Historical Board.

m

APR - 7 2014
CITY MANAGER

CITY OF HAYS
APPLICATION FOR SERVING ON A CITY BOARD OR COMMITTEE

NAME: Lawrence Gould

ADDRESS: 2301 Lincoln Drive

DAY TIME PHONE NUMBER: 785-320-1952 EVENING PHONE NUMBER: 785-625-4874

E-MAIL ADDRESS: gouldlarry24@yahoo.com

PLACE OF EMPLOYMENT: FHSU

HOW LONG HAVE YOU BEEN A RESIDENT OF HAYS? 34 yrs.

NAME OF BOARD(S) YOU ARE INTERESTED IN SERVING ON: Planning Commission - 28 yrs.

HOW MUCH TIME COULD YOU DEVOTE PER MONTH?

ARE YOU RELATED TO ANYONE WHO IS CURRENTLY SERVING ON A BOARD/COMMITTEE? daughter

IF YES, EXPLAIN: Stacey Smith - President - Downtown Hays Development Committee

BRIEFLY DESCRIBE WHY YOU ARE INTERESTED IN SERVING ON A BOARD/COMMITTEE FOR THE CITY OF HAYS.

Last term before final resignation - Help with new projects - Zoning Regs, Implementation of Landscape Ordinance, Comp Plan

PLEASE LIST ANY GROUPS OR ACTIVITIES THAT YOU PARTICIPATE IN, OR HAVE PREVIOUSLY PARTICIPATED IN, THAT DEMONSTRATE YOUR INVOLVEMENT IN THE COMMUNITY.

United Way President, Community Center Task Force Chair, Ellis County Coalition Strategic Plan, Governor's Creating Tomorrow Task Force Chair, etc.

SIGNATURE: Lawrence Gould DATE: 4-5-14

Thank you for your interest in serving on a Board/Commission. It is rewarding to see individuals who are willing and able to commit their time and energy to make the City of Hays a better place to work, live and play.

Form #006

8-mile limit

CITY OF HAYS
APPLICATION FOR SERVING ON A CITY BOARD OR COMMITTEE

Email: wheeler@ruraltel.net

Date: 2/25/2016

Name: Matthew Wheeler

Address: 1505 west 12th

Day Time Phone Number: 785 623 1682

Evening Phone Number: 785 625 7539

Place of Employment: MMS- Midwest Medical Supply (for 25 years)

How long have you been a Resident of Hays: 15 years

Name of Board(s) you are interested in serving on: Planning

How much time could you devote per month: as much as is needed within reason - 10-12 hour

Are you related to anyone who is currently serving on a Board/Committee?: Yes

If Yes, Explain: I serve on this Planning board now and would like a second term.

Briefly describe why you are interested in serving on a Board/Committee for the City of Hays: I have served on this Board for 1 term. I feel that I have done a good job representing the interest of the Community and at the same time looking at the needs of the City of Hays

Please list any groups or activities that you participate in, or have previously participated in, that demonstrates your involvement in the community: when I lived in Ellis I served on the Library Board. I currently serve on a regional Car Club Board.

3-mile

CITY OF HAYS
APPLICATION FOR SERVING ON A CITY BOARD OR COMMITTEE

Email: kevin.coomes@glassmancorp.com

Date: 2/18/2016

Name: Kevin Coomes

Address: 2210 South View Drive

Day Time Phone Number: 785-639-1321

Evening Phone Number:

Place of Employment:

How long have you been a Resident of Hays: 24 months

Name of Board(s) you are interested in serving on: Hays Area Planning Commission

How much time could you devote per month: Whatever is required.

Are you related to anyone who is currently serving on a Board/Committee?: No

If Yes, Explain:

Briefly describe why you are interested in serving on a Board/Committee for the City of Hays: I am interested in serving the public.

Please list any groups or activities that you participate in, or have previously participated in, that demonstrates your involvement in the community: I was a volunteer wrestling coach in Phillipsburg for 15 years. I also volunteered 8 to 10 hours per month at the local Rec for many years.

CITY OF HAYS
APPLICATION FOR SERVING ON A CITY BOARD OR COMMITTEE

NAME: Jim Foutz

ADDRESS: 3701 Thunderbird Dr.

DAY TIME PHONE NUMBER: 625-4619 EVENING PHONE NUMBER: 628-8706

E-MAIL ADDRESS: dsslp@ruraltel.net

PLACE OF EMPLOYMENT: Discount Siding Supply, L.P.

HOW LONG HAVE YOU BEEN A RESIDENT OF HAYS? 36 yrs.

NAME OF BOARD(S) YOU ARE INTERESTED IN SERVING ON: Hays Planning Comm.

HOW MUCH TIME COULD YOU DEVOTE PER MONTH? as needed

ARE YOU RELATED TO ANYONE WHO IS CURRENTLY SERVING ON A BOARD/COMMITTEE? No

IF YES, EXPLAIN:

BRIEFLY DESCRIBE WHY YOU ARE INTERESTED IN SERVING ON A BOARD/COMMITTEE FOR THE CITY OF HAYS. I have served several terms on the HPC Board and enjoy the work we do.

PLEASE LIST ANY GROUPS OR ACTIVITIES THAT YOU PARTICIPATE IN, OR HAVE PREVIOUSLY PARTICIPATED IN, THAT DEMONSTRATE YOUR INVOLVEMENT IN THE COMMUNITY.

Kiwanis, Hays Chamber of Commerce, past HC of C Ambassador

SIGNATURE: Jim Foutz DATE: 2-18-14

Thank you for your interest in serving on a Board/Commission. It is rewarding to see individuals who are willing and able to commit their time and energy to make the City of Hays a better place to work, live and play.

Form #006

3-ride

RECEIVED
FEB 18 2014
CITY MANAGER

CITY OF HAYS
APPLICATION FOR SERVING ON A CITY BOARD OR COMMITTEE

NAME: Jake Glover

ADDRESS: 1481 Taylor Ave

DAY TIME PHONE NUMBER: 259-9683 EVENING PHONE NUMBER: 650-0810

E-MAIL ADDRESS: glojake@gmail.com

PLACE OF EMPLOYMENT: IDEA Education, Manhattan, KS

HOW LONG HAVE YOU BEEN A RESIDENT OF HAYS? approx 17 years

NAME OF BOARD(S) YOU ARE INTERESTED IN SERVING ON: Planning Commission, others as needed.

HOW MUCH TIME COULD YOU DEVOTE PER MONTH? 12-16 mo

ARE YOU RELATED TO ANYONE WHO IS CURRENTLY SERVING ON A BOARD/COMMITTEE? no

IF YES, EXPLAIN:

BRIEFLY DESCRIBE WHY YOU ARE INTERESTED IN SERVING ON A BOARD/COMMITTEE FOR THE CITY OF HAYS.

I love this city. I served on the library board, a downtown board, and I've really enjoyed being on the Planning Commission. I feel I'm just now getting a solid grasp and hope to be able to put my new found expertise to work.

PLEASE LIST ANY GROUPS OR ACTIVITIES THAT YOU PARTICIPATE IN, OR HAVE PREVIOUSLY PARTICIPATED IN, THAT DEMONSTRATE YOUR INVOLVEMENT IN THE COMMUNITY.

Big brothers/sisters, Library board, Downtown development, and others. It's difficult to live here for 17 years and not get involved!

SIGNATURE: [signature] DATE: 2/17/14

Thank you for your interest in serving on a Board/Commission. It is rewarding to see individuals who are willing and able to commit their time and energy to make the City of Hays a better place to work, live and play.

Form #006

CITY OF HAYS
APPLICATION FOR SERVING ON A CITY BOARD OR COMMITTEE

Email: wtr150@yahoo.com

Date: 3/18/2015

Name: Travis Rickford

Address: 4417 Newton Circle

Day Time Phone Number: 785-626-4103

Evening Phone Number: 785-626-4103

Place of Employment: The Center for Global Policy Solutions, Wash DC

How long have you been a Resident of Hays: Eight Years

Name of Board(s) you are interested in serving on: Hays Area Planning Commission

How much time could you devote per month: Monthly meetings plus any meetings as requested

Are you related to anyone who is currently serving on a Board/Committee?: No

If Yes, Explain:

Briefly describe why you are interested in serving on a Board/Committee for the City of Hays: I have served on the planning commission since fall of 2013. During that time I was actively involved in selecting a consulting firm to help the commission re-write zoning regulations. I also attended professional training's to bring back opportunities to strengthen the planning commission and the way it interacts with city staff and the city commission. Specifically, I have a strong passion for city planning, especially around community design and how it impacts the overall health of Hays residents.

Please list any groups or activities that you participate in, or have previously participated in, that demonstrates your involvement in the community: -Everyday Prevention Impacting Communities (EPIC) -O Loughlin PTA -Ellis County Humane Society -Former member Community Emergency Response Team (CERT)

CITY OF HAYS
AGENDA ITEM COVER SHEET

COMMISSION AGENDA ITEM NO. 6 **MEETING DATE: 3-24-16**

TOPIC:

USD 489 Sales Tax Petition

ACTION REQUESTED:

Consider approving Resolution No. 2016-002 calling for a special sales tax election for USD 489 on June 7, 2016.

NARRATIVE:

Ellis County has certified that the USD 489 petition calling for a special election is valid. By State Statute, the City Commission must pass a resolution calling for such election. The City Commission does have latitude on the date chosen. USD 489 has requested the election be held on June 7, 2016.

PERSON/STAFF MEMBER(S) MAKING PRESENTATION:

USD 489 Representative

ADMINISTRATION RECOMMENDATION:

N/A

COMMITTEE RECOMMENDATION(S):

N/A

ATTACHMENTS:

Memo from John Bird, City Attorney
3-9-16 Letter from Lance Bickle, USD 489 Board of Education President
Certification from the Ellis County Clerk
Resolution No. 2016-002
2-4-16 Letter from Thomas Drees, Ellis County Attorney
Petition
Statutes

Commission Work Session Agenda Memo

From: John T. Bird, City Attorney

Work Session: March 17, 2016

Subject: USD 489 Sales Tax Petition

Person(s) Responsible: City Attorney

SUMMARY

USD 489 has decided to pursue a capital improvement plan and to attempt to finance it by use of the City of Hays' sales tax authority. School Districts currently do not have legal authority to levy sales taxes and they rely on State funds and real estate and personal property taxes to finance such projects.

Current State law allows cities and counties to levy sales taxes under certain circumstances, which USD 489 contends should be done to help it pay for its Capital Improvement Program.

BACKGROUND

The USD 489 Capital Improvement Program will cost more than $94 million, according to its presentation to the City Commission on January 7, 2016.

USD 489 has been deciding how to fund the Program. School Districts may put questions to the voters at special elections, called "bond issue elections" regarding use of bonds sold to fund capital improvements. USD 489 wants to have its own election to get approval for the Program. It wants the City to have an election to get approval to levy a sales tax to give to the School District to pay the loans (in the form of bonds) which would be used to build the improvements.

The City has two kinds of sales taxes it can levy. The first is "general purpose." The upper limit of general purpose sales tax for Hays is 2%. The second is "special purpose." The maximum for that tax is 1%.

Hays already has a 1.75% general purpose sales tax. Of the 1.75% general purpose tax, 1.25% is devoted/limited to the General Fund and .50% for water projects. There is not a special purpose sales tax in place. General Purpose sales taxes are permanent and can only be changed by formal action of the Governing Body. Special Purpose sales taxes can only be levied for a maximum of 10 years and Hays has typically sunsetted its special purposes sales tax keyed to payoff of the debt for the special purpose or 10 years, whichever is sooner.

To place a sales tax on a City election ballot, a City can authorize the question to be placed on a ballot to be voted on by Hays voters. The City of Hays has declined to do that.

The only other way to place the question on an election ballot is for a good and sufficient petition, signed by 10% of the electors of the City, to be properly filed. The requirements for filing are contained in State statutes. Before the County Clerk is involved, the County Counselor has to have been presented with the question to be submitted and give an opinion that the form of the question is legal. Because the Ellis County Counselor is also the USD 489 attorney, the Ellis County Attorney, Tom Drees, issued a written advisory opinion that the question's form on the proposed petition is legal and complies with the law governing submission of such questions. Then, if such an opinion is issued, the County Clerk examines the petitions properly filed in that office, all in one group. The Ellis County Clerk is reported to have ruled that the required number of valid signatures has been presented according to law, so an election ensues, using the question approved by the County Attorney. The County Clerk, in the examination of the signatures, had to determine that the petition was properly signed by not less than 10% of the electors of the City, as certified in the most recent certification to the Secretary of State. The County Clerk was required to count as valid only signatures by electors in the City of Hays, Kansas. The District has told the Commission in a letter from its President that the County Clerk has so certified.

After a petition is certified as sufficiently filed by the County Clerk and it is properly filed with the City, then the City, unless it authorizes a special election, shall hold the sales tax ballot question election at the "next succeeding primary or general election…in which the [City] is participating." The timing of the election is a decision to be made by the City Commission.

DISCUSSION

The Commission now has been told the petition has been properly filed and signed. It now has to make a decision as to whether to call the election for a special date or the next Primary or General election in which the City is a participant.

Because of the ambiguous wording of the statute defining "next election", it requires a strained reading to say that the upcoming State primary or general elections qualify as being the next elections in which the City is a participant. There is no question that the electors of the City of Hays will be eligible to vote in August of 2016 and October of 2016, but to say that the City of Hays, as a municipal entity, is a "participant" requires that the definition be stretched, if not broken. It is important that the election be properly conducted, as if it is not, it will be subject to challenge.

The elections of 2017, in August and November, are definitely elections in which the City, as a taxing subdivision, will be a "participant." The Commission will have to decide if it wants to interpret the statute as also meaning that August of 2016 and November of 2016 are elections in which the City as a taxing subdivision is a participant. It could choose to use either date as a "special election" and avoid the debate of whether either is the next election date.

The intentions of USD 489 will need to be taken into account. Recent news reports are that it will conduct its bond issue election on a date already selected. Reports are also that it might conduct an election with two projects proposed, separately.

The question has been proposed for the City to ask its voters is whether the City sales tax of .5% should be imposed and the proceeds used to pay towards the School District's Capital Improvement Project, if the School District's election results in approval by the School District's voters, in the amount of not to exceed $94,035,000.00, to pay the costs enumerated, including construction, renovations, and additions of and to District facilities, costs of related infrastructure and necessary easements appurtenant, and costs of issuance and interest of the general obligation bonds of USD 489. The start of the tax would be the sooner of October 1, 2018, or termination of Ellis County's .50% sales tax of May, 2013 and it would end 10 years after commencement. Theoretically, if the City sales tax yields more than the District's expenditures, by implication, the City sales tax could terminate earlier than 10 years, because there would be no more principal and interest to pay. As a practical matter, it appears unlikely that the City sales tax will yield enough to pay the loans/bonds off within 10 years.

Because the drafters of the Petition chose to make the imposition of the proposed half percent sales tax contingent on both the voters of the City approving this, and the voters of the District approving the bond issue question, and that the votes have to be at an election held at the same time, if the School District selects a date different from the date selected by the City Commission, the sales tax cannot be implemented and used to pay the School District's bonds. For the sales tax revenues to be used to pay the bonds, the elections have to occur on the same date.

Thus, the choices of the City Commission are whether to set the City sales tax election for the date the School District says it intends to have its election, or set it for another date and see if the School District decides to set its election for that date.

The other issue that the City Commission should consider is costs of the election. The law requires the City to pay for its elections and the sales tax election is the City's election, even though it is precipitated by others. The District could volunteer to pay for it but is not required to do that.

LEGAL CONSIDERATION

See above discussion.

FINANCIAL CONSIDERATION

The Financial Officer will inform the Commission of the administrative costs of processing sales tax receipts for another governmental entity. Other financial impacts of the proposed tax include the consideration that use of the USD 489 tax will reduce the amount available to the City for its own projects, limiting it to .5% for 10 years. The financial impact of imposing the requested .5% tax on overall receipts are unknown although it can certainly be assumed that potential shoppers will not decide to shop in Hays because it does have a .5% special purpose tax. None of that, however, impacts the setting of the date of the election.

OPTIONS

The City Commission has the options to:

1. Set an election date coinciding with the USD 489's reported election date of June 7, 2016.
2. Set an election date for some other date, with the following choices:
   A. The Primary Election date for the next City Primary on August 8, 2017.
   B. The General Election date for the next City Election on November 7, 2017.
   C. Any date (Tuesday) between June 7, 2016, and August 8, 2017.

RECOMMENDATION

Staff believes that this is purely a policy decision and the Commission should select the date for the election which best serves the interest of its citizens and the municipality.

ACTION REQUESTED

Set the election date, via the appropriate Resolution.

SUPPPORTING DOCUMENTATION

Draft Resolution.
Copies of Statutes
Correspondence from USD 489
Petition approval letter from County Attorney

Growing Together
USD 489

Rockwell Administration Center
Unified School District 489
323 West 12th Street
Hays, Kansas 67601-3893
TEL (785) 623-2400
FAX (785) 623-2409
www.usd489.com

MAR - 9 2016

March 9, 2016

Dear Hays City Commissioners,

USD 489 volunteers collected 1,629 signatures in support of a half-cent sales tax petition. Those signatures were turned into the County Clerk's office on Monday, February 29th and were canvased by the County Clerk's staff. The clerk's office has verified that the district has collected enough signatures to validate the half-cent sales tax petition.

The Board of Education and petition volunteers are now seeking assistance from the Hays City Commission to allow a half-cent sales tax question to accompany the $94,035,000 bond issue on the June 7th election ballot. USD 489 realizes there are costs associated with having a sales tax question on the election ballot. The district will pay for any and all costs associated with putting the half-cent sales tax question on a ballot. The board will make a motion to pay for all sales tax question costs associated with the election at the next regularly scheduled board meeting on March 21, 2016.

The Board of Education will adopt a resolution calling for a bond issue to not exceed $94,035,000 at the March 21st board meeting. If a sales tax question accompanies the bond issue question on the ballot, the type of election would be walk-in. If only one question is asked, the district will use a mail-in ballot. In order to know which style of election to adopt during the resolution, the board is asking for your intent on allowing the half-cent sales tax question to be put on the same ballot for June 7, 2016 election. Your feedback will ensure the board has the correct material prepared for approval at our upcoming board meeting.

Thank you for the opportunity to address the commission and for any feedback you can provide regarding the matter.

Sincerely,

Lance Bickle
USD 489 Board of Education President

Ellis County Clerk

Donna J. Maskus
County Clerk / Election Officer
718 Main St., P.O. Box 720
Hays, Kansas 67601

Register and Vote

Phone: (785) 628-9410 Fax: (785) 628-9413 E-mail: dclerk@ellisco.net

CERTIFICATION

I, Donna J. Maskus, County Clerk of Ellis County, certify that Unified School District Number 489 Sales Tax Question Petition filed on February 29, 2016, has been checked and verified to have sufficient number of qualified registered voters.

Certified on the 9th day of March, 2016.

(SEAL)

COUNTY CLERK SEAL ELLIS COUNTY, KANSAS

Donna J. Maskus

Donna J. Maskus
Ellis County Clerk/Election Officer

RESOLUTION NO. 2016-002

A RESOLUTION AUTHORIZING AND PROVIDING FOR THE CALLING OF A SPECIAL QUESTION ELECTION IN THE CITY OF HAYS, KANSAS, FOR THE PURPOSE OF SUBMITTING TO THE ELECTORS OF THE CITY THE QUESTION OF IMPOSING A ONE-HALF PERCENT (1/2%) CITYWIDE RETAILERS' SALES TAX FOR THE PURPOSE OF ASSISTING UNIFIED SCHOOL DISTRICT NO. 489, ELLIS COUNTY, KANSAS (HAYS) IN THE REPAYMENT OF THE PRINCIPAL OF AND INTEREST ON GENERAL OBLIGATION BONDS TO BE ISSUED BY THE DISTRICT; AND PROVIDING FOR THE GIVING OF NOTICE OF SAID ELECTION.

WHEREAS, K.S.A. 12-187 *et seq.*, as amended (the "Sales Tax Act"), authorizes the governing body (the "Governing Body") of the City of Hays, Kansas (the "City") to submit at its discretion, and requires the Governing Body to submit upon submission of a petition signed by electors of the City equal in number to not less than 10% of the electors of the City, the question of imposing Citywide retailers' sales taxes to the electors of the City, which in the aggregate may be in amounts not to exceed two percent (2%) for general purposes and not to exceed one percent (1%) for special purposes, provided sales taxes for special purposes shall expire ten (10) years from the initial date of collection thereof; and

WHEREAS, pursuant to the Sales Tax Act, the electors of the City have previously approved propositions to authorize the levy of the following Citywide retailers' sales taxes:

(a) 0.50% for general operations of the City, which tax commenced in 1982 and has no sunset;
(b) 0.50% for development of new water sources, which tax commenced in 1992 and has no sunset; and
(c) 0.75% for general operations of the City, which tax commenced in 2004 and has no sunset; and

WHEREAS, pursuant to the Sales Tax Act, a petition (the "Petition") requesting that the City submit the question of imposing an additional Citywide retailers' sales tax to assist Unified School District No. 489, Ellis County, Kansas (Hays) (the "District") in the repayment of the principal of and interest on not to exceed $94,035,000 principal amount of general obligation bonds to be issued by the District, if approved by the electors of the District (the "District Bonds"), was submitted to the county election officer for Ellis County, Kansas (the "County Clerk"), in accordance with K.S.A. 25-3601 *et seq.* (the "Petition Act"), and the County Clerk found the number of signers of the Petition sufficient; and

WHEREAS, the Governing Body hereby calls a special question election in the City on June 7, 2016 for the purpose of submitting to the qualified electors of the City the question of imposing a one-half percent (1/2%) Citywide retailers' sales tax ("Educational Sales Tax"), as requested by the Petition; and

WHEREAS, if approved, the Educational Sales Tax will constitute a sales tax imposed for special purposes, as said term is described in K.S.A. 12-189, as amended.

NOW, THEREFORE, BE IT RESOLVED BY THE CITY COMMISSION OF THE CITY OF HAYS, KANSAS:

SECTION 1. **Implementation of the Educational Sales Tax**. In order to comply with the Sales Tax Act, the Petition Act, and the Petition, it is necessary and advisable to call an election pursuant to authority of the Sales Tax Act to impose the Educational Sales Tax. Collection of the Educational Sales Tax, if approved by the electors of the City, shall commence on the earlier of: (i) October 1, 2018, or (ii) the termination of the Ellis County, Kansas, one-half percent (1/2%) retailer's sales tax approved by the electors on May 14, 2013, or as soon thereafter as permitted by law, and shall expire ten (10) years after its commencement; provided further that the imposition of such Educational Sales Tax shall be subject to the following conditions: (i) approval by the electors of the City of the proposition authorizing the Educational Sales Tax; and (ii) approval by the electors of the District at an election to be held at the same time of a proposition authorizing the issuance of the District Bonds.

SECTION 2. **Special Question Election.** It is hereby authorized, ordered and directed that a special question election shall be and is hereby called to be held in the City on June 7, 2016, at which time there shall be submitted to the qualified electors of the City the following proposition:

Shall the following be adopted?

> Shall the City of Hays, Kansas, be authorized, pursuant to the authority of K.S.A. 12 187 *et seq*., as amended, and K.S.A. 25-3601 *et seq*., as amended, to impose a one-half percent (1/2%) special purpose Citywide retailers' sales tax (the "Educational Sales Tax"), the revenues to be derived therefrom to be used for the purpose of assisting Unified School District No. 489, Ellis County, Kansas (Hays) (the "District") in the repayment of the principal of and interest on general obligation bonds to be issued by the District in an amount not to exceed $94,035,000 (the "District Bonds") to pay the costs to: (a) construct, furnish, and equip improvements, renovations and additions, including storm shelters, deferred maintenance and technology, to District facilities, including Hays High School, Hays Middle School, Lincoln Elementary School, O'Loughlin Elementary School, Roosevelt Elementary School, Wilson Elementary School and Early Childhood Connections – Washington Site (collectively, the "District Projects"); (b) make related infrastructure and all other necessary improvements appurtenant thereto; and (c) pay costs of issuance and interest on said general obligation bonds during construction of the District Projects; provided that the collection of the Educational Sales tax shall commence on the earlier of: (i) October 1, 2018, or (ii) the termination of the Ellis County, Kansas, one-half percent (1/2%) retailer's sales tax approved by the electors on May 14, 2013, or as soon thereafter as permitted by law, and shall expire ten (10) years after its commencement; provided further that the imposition of such Educational Sales Tax shall be subject to the following conditions: (i) approval by the electors of the City of this proposition; and (ii) approval by the electors of the District at an election to be held at the same time of a proposition authorizing the issuance of the District Bonds?

If the proposition set forth above is approved by the electors of the City, all proceeds of the Educational Sales Tax shall be applied for the purposes set forth therein.

SECTION 3. **Special Question Election Procedures.** The vote at said special question election shall be by ballot, and the proposition stated above shall be printed on the ballots, together with voting instructions as provided by law. The Clerk shall transmit a copy of this Resolution to the County Clerk of Ellis County, Kansas, to give notice of the special question election as provided by law by publishing a Notice of Special Question Election in substantially the form attached hereto as ***Exhibit A*** once each week for two (2) consecutive weeks in a newspaper of general circulation in the City, with the first publication to be not less than twenty-one (21) days prior to the date of the special question election,

and the last publication shall be not more than forty-five (45) days prior to the date of the special question election.

SECTION 4. Effective Date. This Resolution shall be effective from and after its adoption by the Governing Body.

[BALANCE OF THIS PAGE INTENTIONALLY LEFT BLANK]

ADOPTED AND APPROVED by the Governing Body of the City of Hays, Kansas, on March 24, 2016.

(Seal)

_____
EBER PHELPS
Mayor

ATTEST:

_____
BRENDA KITCHEN
City Clerk

[APPROVED AS TO FORM ONLY.

_____
JOHN T. BIRD
City Attorney]

CERTIFICATE

I hereby certify that the above and foregoing is a true and correct copy of the Resolution No. 2016-____ of the City of Hays, Kansas, adopted by the governing body on March 24, 2016, as the same appears of record in my office.

DATED: March 24, 2016.

_____
Clerk

[BALANCE OF PAGE INTENTIONALLY LEFT BLANK]

(Signature page to Resolution)

EXCERPT OF MINUTES OF A MEETING
OF THE GOVERNING BODY OF
THE CITY OF HAYS, KANSAS
HELD ON MARCH 24, 2016

The City Commission (the "Governing Body") of the City of Hays, Kansas (the "City") met in regular session at the usual meeting place in the City, at 6:30 p.m., the following members being present and participating, to-wit:

Absent:

The Mayor declared that a quorum was present and called the meeting to order.

(Other Proceedings)

Thereupon there was presented a Resolution entitled:

A RESOLUTION AUTHORIZING AND PROVIDING FOR THE CALLING OF A SPECIAL QUESTION ELECTION IN THE CITY OF HAYS, KANSAS, FOR THE PURPOSE OF SUBMITTING TO THE ELECTORS OF THE CITY THE QUESTION OF IMPOSING A ONE-HALF PERCENT (1/2%) CITYWIDE RETAILERS' SALES TAX FOR THE PURPOSE OF ASSISTING UNIFIED SCHOOL DISTRICT NO. 489, ELLIS COUNTY, KANSAS (HAYS) IN THE REPAYMENT OF THE PRINCIPAL OF AND INTEREST ON GENERAL OBLIGATION BONDS TO BE ISSUED BY THE DISTRICT; AND PROVIDING FOR THE GIVING OF NOTICE OF SAID ELECTION.

Thereupon Commissioner _____ moved that said Resolution be adopted. The motion was seconded by Commissioner _____. Said Resolution was duly read and considered, and upon being put, the motion for the adoption of said Resolution was carried by the vote of the governing body, the vote being as follows:

Aye: _____.

Nay: _____.

Thereupon, a majority of the members of the governing body having voted in favor of the Resolution, it was declared duly adopted and was then duly numbered Resolution No. 2016-[__]; and was directed to be signed by the Mayor and attested by the Clerk. The Clerk was further directed to transmit a copy of said resolution to the County Clerk of Ellis County, Kansas, and to take all action necessary to proceed with calling said special question election in the manner prescribed by law.

(Other Proceedings)

[BALANCE OF THIS PAGE INTENTIONALLY LEFT BLANK]

CERTIFICATE

I hereby certify that the foregoing Excerpt of Minutes is a true and correct excerpt of the proceedings of the governing body of the City of Hays, Kansas, held on the date stated therein, and that the official minutes of such proceedings are on file in my office.

(SEAL)

_____
Clerk

(Signature page to Excerpt of Minutes)

EXHIBIT A

(First published in the ***Hays Daily News*** on [_____], 2016,
and subsequently on [_____], 2016)

NOTICE OF SPECIAL QUESTION ELECTION
THE CITY OF HAYS, KANSAS

Notice is hereby given to the qualified electors of the City of Hays, Kansas (the "City") that a special question election has been called and will be held on June 7, 2016, for the purpose of submitting to the qualified electors of the City the following proposition:

Shall the following be adopted?

Shall the City of Hays, Kansas, be authorized, pursuant to the authority of K.S.A. 12 187 *et seq*., as amended, and K.S.A. 25-3601 *et seq*., as amended, to impose a one-half percent (1/2%) special purpose Citywide retailers' sales tax (the "Educational Sales Tax"), the revenues to be derived therefrom to be used for the purpose of assisting Unified School District No. 489, Ellis County, Kansas (Hays) (the "District") in the repayment of the principal of and interest on general obligation bonds to be issued by the District in an amount not to exceed $94,035,000 (the "District Bonds") to pay the costs to: (a) construct, furnish, and equip improvements, renovations and additions, including storm shelters, deferred maintenance and technology, to District facilities, including Hays High School, Hays Middle School, Lincoln Elementary School, O'Loughlin Elementary School, Roosevelt Elementary School, Wilson Elementary School and Early Childhood Connections – Washington Site (collectively, the "District Projects"); (b) make related infrastructure and all other necessary improvements appurtenant thereto; and (c) pay costs of issuance and interest on said general obligation bonds during construction of the District Projects; provided that the collection of the Educational Sales tax shall commence on the earlier of: (i) October 1, 2018, or (ii) the termination of the Ellis County, Kansas, one-half percent (1/2%) retailer's sales tax approved by the electors on May 14, 2013, or as soon thereafter as permitted by law, and shall expire ten (10) years after its commencement; provided further that the imposition of such Educational Sales Tax shall be subject to the following conditions: (i) approval by the electors of the City of this proposition; and (ii) approval by the electors of the District at an election to be held at the same time of a proposition authorizing the issuance of the District Bonds?

****

IT IS IMPORTANT FOR EACH QUALIFIED VOTER TO NOTE THAT YOUR BALLOT CANNOT BE COUNTED UNLESS YOU TAKE THE APPROPRIATE STEPS:

To vote in favor of any question submitted on this ballot, completely darken the oval to the left of the word "YES" on the paper ballot. To vote against it, completely darken the oval to the left of the word "NO" on the paper ballot.

◯ YES

◯ NO

****

The polls will open at 7:00 A.M. and will close at 7:00 P.M., on June 7, 2016, the election day. The voting places in the City and the area each voting place will be as follows:

[To be updated by the County Clerk as necessary]

Voters Residing In Precinct	Will Vote At	Location

The election will be conducted by the officers and/or persons provided by law for holding elections, and the method of voting will be by ballot. Registered voters are eligible to vote by advance voting ballot upon application to the County Clerk of Ellis County, Kansas, set forth below pursuant to K.S.A. 25-1117 *et seq*.

****

ADDITIONAL INFORMATION

The following additional information is provided by the City with respect to the effect of this ballot proposition. Passage of this ballot proposition would authorize the City to impose a one-half percent (1/2%) special purpose Citywide retailers' sales tax (the "Educational Sales Tax"), the revenues to be derived therefrom to be used for the purpose of assisting Unified School District No. 489, Ellis County, Kansas (Hays) (the "District") in the repayment of the principal of and interest on general obligation bonds to be issued by the District in an amount not to exceed $94,035,000 (the "District Bonds") to pay the costs to: (a) construct, furnish, and equip improvements, renovations and additions, including storm shelters, deferred maintenance and technology, to District facilities, including Hays High School, Hays Middle School, Lincoln Elementary School, O'Loughlin Elementary School, Roosevelt Elementary School, Wilson Elementary School and Early Childhood Connections – Washington Site (collectively, the "District Projects"); (b) make related infrastructure and all other necessary improvements appurtenant thereto; and (c) pay costs of issuance and interest on said general obligation bonds during construction of the District Projects; provided that the collection of the Educational Sales tax shall commence on the earlier of: (i) October 1, 2018, or (ii) the termination of the Ellis County, Kansas, one-half percent (1/2%) retailer's sales tax approved by the electors on May 14, 2013, or as soon thereafter as permitted by law, and shall expire ten (10) years after its commencement; provided further that the imposition of such Educational Sales Tax shall be subject to the following conditions: (i) approval by the electors of the City of this proposition; and (ii) approval by the electors of the District at an election to be held at the same time of a proposition authorizing the issuance of the District Bonds.

****

ELECTION INFORMATION

The election officer conducting the election will be the County Clerk of Ellis County, Kansas, whose address is: Ellis County Courthouse, 1204 Fort Street, Hays, Kansas 67601.

DATED: March 24, 2016.

Donna J. Maskus, County Clerk
Ellis County, Kansas

BALLOT CERTIFICATE

STATE OF KANSAS)
) ss:
COUNTY OF ELLIS)

I, the undersigned County Clerk of Ellis County, Kansas, do hereby certify that attached below is a true and correct copy of the ballot label used at the special question election held on June 7, 2016, in the City of Hays, Kansas, on the proposition set forth in the ballot; and that the judges and clerks duly qualified by taking their respective oaths before assuming their duties at the election.

WITNESS my hand and official seal on June 7, 2016.

(SEAL)

_____
Donna J. Maskus, County Clerk
Ellis County, Kansas

[Affix copy of ballot label]

STATE OF KANSAS
OFFICIAL BALLOT

THE CITY OF HAYS, KANSAS

JUNE 7, 2016

NOTICE

If you deface or make a mistake and wrongfully mark any ballot, you must return it to the election board and receive a new ballot.

TO VOTE IN FAVOR OF ANY QUESTION SUBMITTED ON THIS BALLOT, COMPLETELY DARKEN THE OVAL TO THE LEFT OF THE WORD "YES" ON THE PAPER BALLOT. TO VOTE AGAINST IT, COMPLETELY DARKEN THE OVAL TO THE LEFT OF THE WORD "NO" ON THE PAPER BALLOT.

SHALL THE FOLLOWING BE ADOPTED?

SHALL THE CITY OF HAYS, KANSAS, BE AUTHORIZED, PURSUANT TO THE AUTHORITY OF K.S.A. 12 187 *ET SEQ*., AS AMENDED, AND K.S.A. 25-3601 *ET SEQ*., AS AMENDED, TO IMPOSE A ONE-HALF PERCENT (1/2%) SPECIAL PURPOSE CITYWIDE RETAILERS' SALES TAX (THE "EDUCATIONAL SALES TAX"), THE REVENUES TO BE DERIVED THEREFROM TO BE USED FOR THE PURPOSE OF ASSISTING UNIFIED SCHOOL DISTRICT NO. 489, ELLIS COUNTY, KANSAS (HAYS) (THE "DISTRICT") IN THE REPAYMENT OF THE PRINCIPAL OF AND INTEREST ON GENERAL OBLIGATION BONDS TO BE ISSUED BY THE DISTRICT IN AN AMOUNT NOT TO EXCEED $94,035,000 (THE "DISTRICT BONDS") TO PAY THE COSTS TO: (A) CONSTRUCT, FURNISH, AND EQUIP IMPROVEMENTS, RENOVATIONS AND ADDITIONS, INCLUDING STORM SHELTERS, DEFERRED MAINTENANCE AND TECHNOLOGY, TO DISTRICT FACILITIES, INCLUDING HAYS HIGH SCHOOL, HAYS MIDDLE SCHOOL, LINCOLN ELEMENTARY SCHOOL, O'LOUGHLIN ELEMENTARY SCHOOL, ROOSEVELT ELEMENTARY SCHOOL, WILSON ELEMENTARY SCHOOL AND EARLY CHILDHOOD CONNECTIONS – WASHINGTON SITE (COLLECTIVELY, THE "DISTRICT PROJECTS"); (B) MAKE RELATED INFRASTRUCTURE AND ALL OTHER NECESSARY IMPROVEMENTS APPURTENANT THERETO; AND (C) PAY COSTS OF ISSUANCE AND INTEREST ON SAID GENERAL OBLIGATION BONDS DURING CONSTRUCTION OF THE DISTRICT PROJECTS; PROVIDED THAT THE COLLECTION OF THE EDUCATIONAL SALES TAX SHALL COMMENCE ON THE EARLIER OF: (I) OCTOBER 1, 2018, OR (II) THE TERMINATION OF THE ELLIS COUNTY, KANSAS, ONE-HALF PERCENT (1/2%) RETAILER'S SALES TAX APPROVED BY THE ELECTORS ON MAY 14, 2013, OR AS SOON THEREAFTER AS PERMITTED BY LAW, AND SHALL EXPIRE TEN (10) YEARS AFTER ITS COMMENCEMENT;

PROVIDED FURTHER THAT THE IMPOSITION OF SUCH EDUCATIONAL SALES TAX SHALL BE SUBJECT TO THE FOLLOWING CONDITIONS: (I) APPROVAL BY THE ELECTORS OF THE CITY OF THIS PROPOSITION; AND (II) APPROVAL BY THE ELECTORS OF THE DISTRICT AT AN ELECTION TO BE HELD AT THE SAME TIME OF A PROPOSITION AUTHORIZING THE ISSUANCE OF THE DISTRICT BONDS?

◯ YES

◯ NO

STATE OF KANSAS
OFFICIAL BALLOT

CITY OF HAYS, KANSAS

QUESTION SUBMITTED

SPECIAL QUESTION ELECTION

JUNE 7, 2016

CITY OF HAYS, KANSAS

CERTIFICATION OF CANVASS OF VOTES

STATE OF KANSAS)
) ss:
COUNTY OF Ellis)

I, the undersigned County Clerk of Ellis County, Kansas, do hereby certify that the following are the true and correct results according to the abstract of votes cast at the special question election held on June 7, 2016, in the City of Hays, Kansas, on the following proposition:

Shall the following be adopted?

Shall the City of Hays, Kansas, be authorized, pursuant to the authority of K.S.A. 12 187 *et seq*., as amended, and K.S.A. 25-3601 *et seq*., as amended, to impose a one-half percent (1/2%) special purpose Citywide retailers' sales tax (the "Educational Sales Tax"), the revenues to be derived therefrom to be used for the purpose of assisting Unified School District No. 489, Ellis County, Kansas (Hays) (the "District") in the repayment of the principal of and interest on general obligation bonds to be issued by the District in an amount not to exceed $94,035,000 (the "District Bonds") to pay the costs to: (a) construct, furnish, and equip improvements, renovations and additions, including storm shelters, deferred maintenance and technology, to District facilities, including Hays High School, Hays Middle School, Lincoln Elementary School, O'Loughlin Elementary School, Roosevelt Elementary School, Wilson Elementary School and Early Childhood Connections – Washington Site (collectively, the "District Projects"); (b) make related infrastructure and all other necessary improvements appurtenant thereto; and (c) pay costs of issuance and interest on said general obligation bonds during construction of the District Projects; provided that the collection of the Educational Sales tax shall commence on the earlier of: (i) October 1, 2018, or (ii) the termination of the Ellis County, Kansas, one-half percent (1/2%) retailer's sales tax approved by the electors on May 14, 2013, or as soon thereafter as permitted by law, and shall expire ten (10) years after its commencement; provided further that the imposition of such Educational Sales Tax shall be subject to the following conditions: (i) approval by the electors of the City of this proposition; and (ii) approval by the electors of the District at an election to be held at the same time of a proposition authorizing the issuance of the District Bonds?

Such results are shown by the returns of said election which are on file in the Office of the County Clerk and canvassed as provided by law:

Yes ---------- _____

No ---------- _____

Void ---------- _____

Total Vote ---------- _____

WITNESS my hand and official seal on [_____], 2016.

(Seal)

_____
Donna J. Maskus, County Clerk
Ellis County, Kansas

107 W 12th
Hays, Kansas 67601

Telephone (785) 628-9405
Fax (785) 628-9409

Ellis County Attorney

Thomas J. Drees
Ellis County Attorney

Charlene Brubaker
Asst. County Attorney

Brenda L. Basgall
Asst. County Attorney

Crystalyn M Oswald
Asst. County Attorney

Christopher Lyon
Asst. County Attorney

February 4, 2016

William Jeter
USD 489 School Board Attorney
Hays, KS 67601
(Hand Delivered)

Re: USD 489 Sales Tax Petition – Advisory Opinion of Legality

Dear Bill:

I am in receipt of your proposed petition for election of a ½ cent city wide sales tax for USD 489 Facilities. (See attached). You submitted the petition to me on Wednesday, February 3, 2016, for approval pursuant to K.S.A. 25-3601 et. seq., K.S.A. 12-187 et. seq., and K.S.A. 25-601 et. seq.

In accordance with K.S.A. 25-3601(a), I hereby provide you with this written advisory opinion that the petition, the questioned contained therein, the statement of the petition signer, and the format of the affidavit of petition circulator are in compliance with appropriate Kansas Statutes, are legal, and comply with the requirements necessary to circulate the petition.

Bill, I do note that there appears to be a conflict in the statutory law as K.S.A. 25-3601(c) states that the petition shall start with "shall the following ordinance or resolution become effective?" and K.S.A. 25-620 states that the proposition or question shall be proceeded by the words "shall the following be adopted?". These appear to contradict one another. However, K.S.A. 25-3601(d) states that when another statute imposes specific requirements different from the requirements imposed by K.S.A. 25-3601, the provisions of the specific statute shall control. Because you are petitioning a question to be placed on a ballot to be voted by the electors of the city of Hays, I conclude K.S.A. 25-620 to be the more specific statute and the wording "shall the following be adopted?" is appropriate.

Thank you for hand delivering the proposed petition to me. I will extend the courtesy of hand delivering this written advisory opinion as to the legality of the form of the question and petition back to you.

If you have any questions concerning this matter, please contact me.

Sincerely,

Thomas J Drees
Ellis County Attorney
Sp. Ct. No. 14176

Attachment

PETITION FOR ELECTION OF CITY OF HAYS, KANSAS TO IMPOSE A ONE-HALF PERCENT (½%) CITY-WIDE RETAILERS' SPECIAL PURPOSE SALES TAX TO CONSTRUCT, FURNISH AND EQUIP IMPROVEMENTS, RENOVATIONS AND ADDITIONS TO UNIFIED SCHOOL DISTRICT NO. 489 FACILITIES

SHALL THE FOLLOWING BE ADOPTED? Shall the City of Hays, Kansas, be authorized, pursuant to the authority of K.S.A. 12-187 et seq., as amended, and K.S.A. 25-3601 et seq., as amended, to impose a one-half percent (1/2%) special purpose Citywide retailers' sales tax (the "Educational Sales Tax"), the revenues to be derived therefrom to be used for the purpose of assisting Unified School District No. 489, Ellis County, Kansas (Hays) (the "District") in the repayment of the principal of and interest on general obligation bonds to be issued by the District in an amount not to exceed $94,035,000 (the "District Bonds") to pay the costs to: (a) construct, furnish, and equip improvements, renovations and additions, including storm shelters, deferred maintenance and technology, to District facilities, including Hays High School, Hays Middle School, Lincoln Elementary School, O'Loughlin Elementary School, Roosevelt Elementary School, Wilson Elementary School and Early Childhood Connections – Washington Site (collectively, the "District Projects"); (b) make related infrastructure and all other necessary improvements appurtenant thereto; and (c) pay costs of issuance and interest on said general obligation bonds during construction of the District Projects; provided that the collection of the Educational Sales tax shall commence on the earlier of: (i) October 1, 2018, or (ii) the termination of the Ellis County, Kansas, one-half percent (1/2%) retailer's sales tax approved by the electors on May 14, 2013, (renovation of Ellis County facilities: Jail, Courthouse and Emergency Services) or as soon thereafter as permitted by law, and shall expire ten (10) years after its commencement; provided further that the imposition of such Educational Sales Tax shall be subject to the following conditions: (i) approval by the electors of the City of this proposition; and (ii) approval by the electors of the District at an election to be held at the same time of a proposition authorizing the issuance of the District Bonds?

By signing this petition, I am requesting that the question noted above, be submitted to the electors of the City of Hays, Kansas, at an election called and held thereon.

I have personally signed this petition. I am a registered elector of the State of Kansas and of the City of Hays, Kansas and my residence address is correctly written after my name.

	Signature of Signer	Name of Signer (Print)	Residence Address (as registered)	Date
1				
2				
3				
4				
5				
6				
7				
8				
9				
10				

AFFIDAVIT OF PETITION CIRCULATOR

I am the circulator of this Petition, a resident of the State of Kansas and possess the qualifications of an elector of the State of Kansas. I have personally witnessed the signing of this Petition by each person whose name appears thereon.

_____
Signature of Circulator

_____
Circulator's Residence Address

VERIFICATION

STATE OF KANSAS, COUNTY OF ELLIS, ss:
_____ being first duly sworn on her/her oath, states and avers as follows:

That he/she is the Circulator above named; that he/she has read the above and foregoing and knows the same is true and correct.

_____
Signature

ACKNOWLEDGED AND SUBSCRIBED AND SWORN TO before me this _____ day of _____, 2016.

_____
Notary Public

_____
Appointment

12-187. Countywide and city retailers' sales taxes; procedure for imposition; election required; rate; use of revenue; validation of certain elections; continuation in effect of certain taxes; authority for imposition; statement of purpose. (a) No city shall impose a retailers' sales tax under the provisions of this act without the governing body of such city having first submitted such proposition to and having received the approval of a majority of the electors of the city voting thereon at an election called and held therefor. The governing body of any city may submit the question of imposing a retailers' sales tax and the governing body shall be required to submit the question upon submission of a petition signed by electors of such city equal in number to not less than 10% of the electors of such city.

(b) (1) The board of county commissioners of any county may submit the question of imposing a countywide retailers' sales tax to the electors at an election called and held thereon, and any such board shall be required to submit the question upon submission of a petition signed by electors of such county equal in number to not less than 10% of the electors of such county who voted at the last preceding general election for the office of secretary of state, or upon receiving resolutions requesting such an election passed by not less than 2/3 of the membership of the governing body of each of one or more cities within such county which contains a population of not less than 25% of the entire population of the county, or upon receiving resolutions requesting such an election passed by 2/3 of the membership of the governing body of each of one or more taxing subdivisions within such county which levy not less than 25% of the property taxes levied by all taxing subdivisions within the county.

(2) The board of county commissioners of Anderson, Atchison, Barton, Brown, Butler, Chase, Cowley, Cherokee, Crawford, Ford, Franklin, Jefferson, Linn, Lyon, Marion, Miami, Montgomery, Neosho, Osage, Ottawa, Reno, Riley, Saline, Seward, Sumner, Wabaunsee, Wilson and Wyandotte counties may submit the question of imposing a countywide retailers' sales tax and pledging the revenue received therefrom for the purpose of financing the construction or remodeling of a courthouse, jail, law enforcement center facility or other county administrative facility, to the electors at an election called and held thereon. The tax imposed pursuant to this paragraph shall expire when sales tax sufficient to pay all of the costs incurred in the financing of such facility has been collected by retailers as determined by the secretary of revenue. Nothing in this paragraph shall be construed to allow the rate of tax imposed by Butler, Chase, Cowley, Lyon, Montgomery, Neosho, Riley, Sumner or Wilson county pursuant to this paragraph to exceed or be imposed at any rate other than the rates prescribed in K.S.A. 12-189, and amendments thereto.

(3) (A) Except as otherwise provided in this paragraph, the result of the election held on November 8, 1988, on the question submitted by the board of county commissioners of Jackson county for the purpose of increasing its countywide retailers' sales tax by 1% is hereby declared valid, and the revenue received therefrom by the county shall be expended solely for the purpose of financing the Banner Creek reservoir project. The tax imposed pursuant to this paragraph shall take effect on the effective date of this act and shall expire not later than five years after such date.

(B) The result of the election held on November 8, 1994, on the question submitted by the board of county commissioners of Ottawa county for the purpose of increasing its countywide retailers' sales tax by 1% is hereby declared valid, and the revenue received therefrom by the county shall be expended solely for the purpose of financing the erection, construction and furnishing of a law enforcement center and jail facility.

(C) Except as otherwise provided in this paragraph, the result of the election held on November 2, 2004, on the question submitted by the board of county commissioners of Sedgwick county for the purpose of increasing its countywide retailers' sales tax by 1% is hereby declared valid, and the revenue received therefrom by the county shall be used only to pay the costs of: (i) Acquisition of a site and constructing and equipping thereon a new regional events center, associated parking and infrastructure improvements and related appurtenances thereto, to be located in the downtown area of the city of Wichita, Kansas, (the "downtown arena"); (ii) design for the Kansas coliseum complex and construction of improvements to the pavilions; and (iii) establishing an operating and maintenance reserve for the downtown arena and the Kansas coliseum complex. The tax imposed pursuant to this paragraph shall commence on July 1, 2005, and shall terminate not later than 30 months after the commencement thereof.

(D) Except as otherwise provided in this paragraph, the result of the election held on August 5, 2008, on the question submitted by the board of county commissioners of Lyon county for the purpose of increasing its countywide retailers' sales tax by 1% is hereby declared valid, and the revenue received therefrom by the county shall be expended for the purposes of ad valorem tax reduction and capital outlay. The tax imposed pursuant to this paragraph shall terminate not later than five years after the commencement thereof.

(E) Except as otherwise provided in this paragraph, the result of the election held on August 5, 2008, on the question submitted by the board of county commissioners of Rawlins county for the purpose of increasing its countywide retailers' sales tax by 0.75% is hereby declared valid, and the revenue received therefrom by the county shall be expended for the purposes of financing the costs of a swimming pool. The tax imposed pursuant to this paragraph shall terminate not later than 15 years after the commencement thereof or upon payment of all costs authorized pursuant to this paragraph in the financing of such project.

(F) The result of the election held on December 1, 2009, on the question submitted by the board of county commissioners of Chautauqua county for the purpose of increasing its countywide retailers' sales tax by 1% is hereby declared valid, and the revenue received from such tax by the county shall be expended for the purposes of financing the costs of constructing, furnishing and equipping a county jail and law enforcement center and necessary improvements appurtenant to such jail and law enforcement center. Any tax imposed pursuant to authority granted in this paragraph shall terminate upon payment of all costs authorized pursuant to this paragraph incurred in the financing of the project described in this paragraph.

(4) The board of county commissioners of Finney and Ford counties may submit the question of imposing a countywide retailers' sales tax at the rate of 0.25% and pledging the revenue received therefrom for the purpose of financing all or any portion of the cost to be paid by Finney or Ford county for construction of highway projects identified as system enhancements under the provisions of paragraph (5) of subsection (b) of K.S.A. 68-2314, and amendments thereto, to the electors at an election called and held thereon. Such election shall be called and held in the manner provided by the general bond law. The tax imposed pursuant to this paragraph shall expire upon the payment of all costs authorized pursuant to this paragraph in the financing of such highway projects. Nothing in this paragraph shall be construed to allow the rate of tax imposed by Finney or Ford county pursuant to this paragraph to exceed the maximum rate prescribed in K.S.A. 12-189, and amendments thereto. If any funds remain upon the payment of all costs authorized pursuant to this paragraph in the financing of such highway projects in Finney county, the state treasurer shall remit such funds to the treasurer of Finney county and upon receipt of such moneys shall be

deposited to the credit of the county road and bridge fund. If any funds remain upon the payment of all costs authorized pursuant to this paragraph in the financing of such highway projects in Ford county, the state treasurer shall remit such funds to the treasurer of Ford county and upon receipt of such moneys shall be deposited to the credit of the county road and bridge fund.

(5) The board of county commissioners of any county may submit the question of imposing a retailers' sales tax at the rate of 0.25%, 0.5%, 0.75% or 1% and pledging the revenue received therefrom for the purpose of financing the provision of health care services, as enumerated in the question, to the electors at an election called and held thereon. Whenever any county imposes a tax pursuant to this paragraph, any tax imposed pursuant to paragraph (2) of subsection (a) by any city located in such county shall expire upon the effective date of the imposition of the countywide tax, and thereafter the state treasurer shall remit to each such city that portion of the countywide tax revenue collected by retailers within such city as certified by the director of taxation. The tax imposed pursuant to this paragraph shall be deemed to be in addition to the rate limitations prescribed in K.S.A. 12-189, and amendments thereto. As used in this paragraph, health care services shall include, but not be limited to, the following: Local health departments, city or county hospitals, city or county nursing homes, preventive health care services including immunizations, prenatal care and the postponement of entry into nursing homes by home care services, mental health services, indigent health care, physician or health care worker recruitment, health education, emergency medical services, rural health clinics, integration of health care services, home health services and rural health networks.

(6) The board of county commissioners of Allen county may submit the question of imposing a countywide retailers' sales tax at the rate of 0.5% and pledging the revenue received therefrom for the purpose of financing the costs of operation and construction of a solid waste disposal area or the modification of an existing landfill to comply with federal regulations to the electors at an election called and held thereon. The tax imposed pursuant to this paragraph shall expire upon the payment of all costs incurred in the financing of the project undertaken. Nothing in this paragraph shall be construed to allow the rate of tax imposed by Allen county pursuant to this paragraph to exceed or be imposed at any rate other than the rates prescribed in K.S.A. 12-189, and amendments thereto.

(7) The board of county commissioners of Clay, Dickinson and Miami county may submit the question of imposing a countywide retailers' sales tax at the rate of 0.50% in the case of Clay and Dickinson county and at a rate of up to 1% in the case of Miami county, and pledging the revenue received therefrom for the purpose of financing the costs of roadway construction and improvement to the electors at an election called and held thereon. Except as otherwise provided, the tax imposed pursuant to this paragraph shall expire after five years from the date such tax is first collected. The result of the election held on November 2, 2004, on the question submitted by the board of county commissioners of Miami county for the purpose of extending for an additional five-year period the countywide retailers' sales tax imposed pursuant to this subsection in Miami county is hereby declared valid. The countywide retailers' sales tax imposed pursuant to this subsection in Clay and Miami county may be extended or reenacted for additional five-year periods upon the board of county commissioners of Clay and Miami county submitting such question to the electors at an election called and held thereon for each additional five-year period as provided by law.

(8) The board of county commissioners of Sherman county may submit the question of imposing a countywide retailers' sales tax at the rate of 1% and pledging the revenue received therefrom for the purpose of financing the costs of street and roadway improvements to the electors at an election called and held thereon. The tax imposed pursuant to this paragraph shall expire upon payment of all costs authorized pursuant to this paragraph in the financing of such project.

(9) The board of county commissioners of Cowley, Crawford, Russell and Woodson county may submit the question of imposing a countywide retailers' sales tax at the rate of 0.5% in the case of Crawford, Russell and Woodson county and at a rate of up to 0.25%, in the case of Cowley county and pledging the revenue received therefrom for the purpose of financing economic development initiatives or public infrastructure projects. The tax imposed pursuant to this paragraph shall expire after five years from the date such tax is first collected.

(10) The board of county commissioners of Franklin county may submit the question of imposing a countywide retailers' sales tax at the rate of 0.25% and pledging the revenue received therefrom for the purpose of financing recreational facilities. The tax imposed pursuant to this paragraph shall expire upon payment of all costs authorized in financing such facilities.

(11) The board of county commissioners of Douglas county may submit the question of imposing a countywide retailers' sales tax at the rate of 0.25% and pledging the revenue received therefrom for the purposes of conservation, access and management of open space; preservation of cultural heritage; and economic development projects and activities.

(12) The board of county commissioners of Shawnee county may submit the question of imposing a countywide retailers' sales tax at the rate of 0.25% and pledging the revenue received therefrom to the city of Topeka for the purpose of financing the costs of rebuilding the Topeka boulevard bridge and other public infrastructure improvements associated with such project to the electors at an election called and held thereon. The tax imposed pursuant to this paragraph shall expire upon payment of all costs authorized in financing such project.

(13) The board of county commissioners of Jackson county may submit the question of imposing a countywide retailers' sales tax at a rate of 0.4% and pledging the revenue received therefrom as follows: 50% of such revenues for the purpose of financing for economic development initiatives; and 50% of such revenues for the purpose of financing public infrastructure projects to the electors at an election called and held thereon. The tax imposed pursuant to this paragraph shall expire after seven years from the date such tax is first collected. The board of county commissioners of Jackson county may submit the question of imposing a countywide retailers' sales tax at a rate of 0.4% which such tax shall take effect after the expiration of the tax imposed pursuant to this paragraph prior to the effective date of this act, and pledging the revenue received therefrom for the purpose of financing public infrastructure projects to the electors at an election called and held thereon. Such tax shall expire after seven years from the date such tax is first collected.

(14) The board of county commissioners of Neosho county may submit the question of imposing a countywide retailers' sales tax at the rate of 0.5% and pledging the revenue received therefrom for the purpose of financing the costs of roadway construction and improvement to the electors at an election called and held thereon. The tax imposed pursuant to this paragraph shall expire upon payment of all costs authorized pursuant to this paragraph in the financing of such project.

(15) The board of county commissioners of Saline county may submit the question of imposing a countywide retailers' sales tax at the rate of up to 0.5% and pledging the revenue received therefrom for the purpose of financing the costs of construction and operation of an expo center to the electors at an election called and held thereon. The tax imposed pursuant to this paragraph shall expire after five years from the date such tax is first collected.
(16) The board of county commissioners of Harvey county may submit the question of imposing a countywide retailers' sales tax at the rate of 1.0% and pledging the revenue received therefrom for the purpose of financing the costs of property tax relief, economic development initiatives and public infrastructure improvements to the electors at an election called and held thereon.
(17) The board of county commissioners of Atchison county may submit the question of imposing a countywide retailers' sales tax at the rate of 0.25% and pledging the revenue received therefrom for the purpose of financing the costs of construction and maintenance of sports and recreational facilities to the electors at an election called and held thereon. The tax imposed pursuant to this paragraph shall expire upon payment of all costs authorized in financing such facilities.
(18) The board of county commissioners of Wabaunsee county may submit the question of imposing a countywide retailers' sales tax at the rate of 0.5% and pledging the revenue received therefrom for the purpose of financing the costs of bridge and roadway construction and improvement to the electors at an election called and held thereon. The tax imposed pursuant to this paragraph shall expire after 15 years from the date such tax is first collected.
(19) The board of county commissioners of Jefferson county may submit the question of imposing a countywide retailers' sales tax at the rate of 1% and pledging the revenue received therefrom for the purpose of financing the costs of roadway construction and improvement to the electors at an election called and held thereon. The tax imposed pursuant to this paragraph shall expire after six years from the date such tax is first collected. The countywide retailers' sales tax imposed pursuant to this paragraph may be extended or reenacted for additional six-year periods upon the board of county commissioners of Jefferson county submitting such question to the electors at an election called and held thereon for each additional six-year period as provided by law.
(20) The board of county commissioners of Riley county may submit the question of imposing a countywide retailers' sales tax at the rate of up to 1% and pledging the revenue received therefrom for the purpose of financing the costs of bridge and roadway construction and improvement to the electors at an election called and held thereon. The tax imposed pursuant to this paragraph shall expire after five years from the date such tax is first collected.
(21) The board of county commissioners of Johnson county may submit the question of imposing a countywide retailers' sales tax at the rate of 0.25% and pledging the revenue received therefrom for the purpose of financing the construction and operation costs of public safety projects, including, but not limited to, a jail, detention center, sheriff's resource center, crime lab or other county administrative or operational facility dedicated to public safety, to the electors at an election called and held thereon. The tax imposed pursuant to this paragraph shall expire after 10 years from the date such tax is first collected. The countywide retailers' sales tax imposed pursuant to this subsection may be extended or reenacted for additional periods not exceeding 10 years upon the board of county commissioners of Johnson county submitting such question to the electors at an election called and held thereon for each additional ten-year period as provided by law.
(22) The board of county commissioners of Wilson county may submit the question of imposing a countywide retailers' sales tax at the rate of up to 1% and pledging the revenue received therefrom for the purpose of financing the costs of roadway construction and improvements to federal highways, the development of a new industrial park and other public infrastructure improvements to the electors at an election called and held thereon. The tax imposed pursuant to this paragraph shall expire upon payment of all costs authorized pursuant to this paragraph in the financing of such project or projects.
(23) The board of county commissioners of Butler county may submit the question of imposing a countywide retailers' sales tax at the rate of either 0.25%, 0.5%, 0.75% or 1% and pledging the revenue received therefrom for the purpose of financing the costs of public safety capital projects or bridge and roadway construction projects, or both, to the electors at an election called and held thereon. The tax imposed pursuant to this paragraph shall expire upon payment of all costs authorized in financing such projects.
(24) The board of county commissioners of Barton county may submit the question of imposing a countywide retailers' sales tax at the rate of up to 0.5% and pledging the revenue received therefrom for the purpose of financing the costs of roadway and bridge construction and improvement and infrastructure development and improvement to the electors at an election called and held thereon. The tax imposed pursuant to this paragraph shall expire after 10 years from the date such tax is first collected.
(25) The board of county commissioners of Jefferson county may submit the question of imposing a countywide retailers' sales tax at the rate of 0.25% and pledging the revenue received therefrom for the purpose of financing the costs of the county's obligation as participating employer to make employer contributions and other required contributions to the Kansas public employees retirement system for eligible employees of the county who are members of the Kansas police and firemen's retirement system, to the electors at an election called and held thereon. The tax imposed pursuant to this paragraph shall expire upon payment of all costs authorized in financing such purpose.
(26) The board of county commissioners of Pottawatomie county may submit the question of imposing a countywide retailers' sales tax at the rate of up to 0.5% and pledging the revenue received therefrom for the purpose of financing the costs of construction or remodeling of a courthouse, jail, law enforcement center facility or other county administrative facility, or public infrastructure improvements, or both, to the electors at an election called and held thereon. The tax imposed pursuant to this paragraph shall expire upon payment of all costs authorized in financing such project or projects.
(27) The board of county commissioners of Kingman county may submit the question of imposing a countywide retailers' sales tax at the rate of 0.25%, 0.5%, 0.75% or 1% and pledging the revenue received therefrom for the purpose of financing the costs of constructing and furnishing a law enforcement center and jail facility and the costs of roadway and bridge improvements to the electors at an election called and held thereon. The tax imposed pursuant to this paragraph shall expire not later than 20 years from the date such tax is first collected.
(28) The board of county commissioners of Edwards county may submit the question of imposing a countywide retailers' sales tax at the rate of 0.375% and pledging the revenue therefrom for the purpose of financing the costs of economic development initiatives to the electors at an election called and held thereon.

(29) The board of county commissioners of Rooks county may submit the question of imposing a countywide retailers' sales tax at the rate of 0.5% and pledging the revenue therefrom for the purpose of financing the costs of constructing or remodeling and furnishing a jail facility to the electors at an election called and held thereon. The tax imposed pursuant to this paragraph shall expire upon the payment of all costs authorized in financing such project or projects.

(c) The boards of county commissioners of any two or more contiguous counties, upon adoption of a joint resolution by such boards, may submit the question of imposing a retailers' sales tax within such counties to the electors of such counties at an election called and held thereon and such boards of any two or more contiguous counties shall be required to submit such question upon submission of a petition in each of such counties, signed by a number of electors of each of such counties where submitted equal in number to not less than 10% of the electors of each of such counties who voted at the last preceding general election for the office of secretary of state, or upon receiving resolutions requesting such an election passed by not less than 2/3 of the membership of the governing body of each of one or more cities within each of such counties which contains a population of not less than 25% of the entire population of each of such counties, or upon receiving resolutions requesting such an election passed by 2/3 of the membership of the governing body of each of one or more taxing subdivisions within each of such counties which levy not less than 25% of the property taxes levied by all taxing subdivisions within each of such counties.

(d) Any city retailers' sales tax being levied by a city prior to July 1, 2006, shall continue in effect until repealed in the manner provided herein for the adoption and approval of such tax or until repealed by the adoption of an ordinance for such repeal. Any countywide retailers' sales tax in the amount of 0.5% or 1% in effect on July 1, 1990, shall continue in effect until repealed in the manner provided herein for the adoption and approval of such tax.

(e) Any city or county proposing to adopt a retailers' sales tax shall give notice of its intention to submit such proposition for approval by the electors in the manner required by K.S.A. 10-120, and amendments thereto. The notices shall state the time of the election and the rate and effective date of the proposed tax. If a majority of the electors voting thereon at such election fail to approve the proposition, such proposition may be resubmitted under the conditions and in the manner provided in this act for submission of the proposition. If a majority of the electors voting thereon at such election shall approve the levying of such tax, the governing body of any such city or county shall provide by ordinance or resolution, as the case may be, for the levy of the tax. Any repeal of such tax or any reduction or increase in the rate thereof, within the limits prescribed by K.S.A. 12-189, and amendments thereto, shall be accomplished in the manner provided herein for the adoption and approval of such tax except that the repeal of any such city retailers' sales tax may be accomplished by the adoption of an ordinance so providing.

(f) The sufficiency of the number of signers of any petition filed under this section shall be determined by the county election officer. Every election held under this act shall be conducted by the county election officer.

(g) The governing body of the city or county proposing to levy any retailers' sales tax shall specify the purpose or purposes for which the revenue would be used, and a statement generally describing such purpose or purposes shall be included as a part of the ballot proposition.

History: L. 1978, ch. 56, § 11; L. 1982, ch. 64, § 2; L. 1983, ch. 57, § 1; L. 1987, ch. 63, § 1; L. 1988, ch. 73, § 1; L. 1989, ch. 57, § 1; L. 1990, ch. 68, § 3; L. 1990, ch. 69, § 1; L. 1992, ch. 198, § 5; L. 1992, ch. 279, § 1; L. 1992, ch. 251, § 1; L. 1993, ch. 240, § 1; L. 1994, ch. 354, § 1; L. 1995, ch. 12, § 1; L. 1995, ch. 246, § 1; L. 1998, ch. 11, § 1; L. 1998, ch. 188, § 1; L. 1999, ch. 1, § 2; L. 2000, ch. 140, § 1; L. 2002, ch. 185, § 34; L. 2003, ch. 147, § 32; L. 2004, ch. 173, § 3; L. 2005, ch. 47, § 1; L. 2005, ch. 186, § 2; L. 2006, ch. 9, § 1; L. 2006, ch. 191, § 1; L. 2007, ch. 158, § 6; L. 2007, ch. 195, § 52; L. 2008, ch. 100, § 3; L. 2009, ch. 1, § 1; L. 2010, ch. 3, § 1; L. 2010, ch. 83, § 1; L. 2011, ch. 88, § 1; L. 2014, ch. 132, § 1; July 1.

Revisor's Note:

Section was also amended by L. 2005, ch. 24, § 1 and L. 2005, ch. 119, § 1, but those versions were repealed by L. 2005, ch. 186, § 22.

Section not reconciled following amendments by three bills during 2006 session, see also 12-187b.

Section was also amended by L. 2007, ch. 153, § 1, but that version was repealed by L. 2007, ch. 195, § 59.

12-189. Same; rates, general and special purposes, exceptions for certain counties; administration and collection by state; refunds; remittance to cities and counties; monthly reports; confidentiality requirements. The rate of any city retailers' sales tax shall be fixed in increments of 0.05% and in an amount not to exceed 2% for general purposes and not to exceed 1% for special purposes which shall be determined by the governing body of the city. For any retailers' sales tax imposed by a city for special purposes, such city shall specify the purposes for which such tax is imposed. All such special purpose retailers' sales taxes imposed by a city shall expire after 10 years from the date such tax is first collected. The rate of any countywide retailers' sales tax shall be fixed in an amount not to exceed 1% and shall be fixed in increments of 0.25%, and which amount shall be determined by the board of county commissioners, except that:

(a) The board of county commissioners of Wabaunsee county, for the purposes of paragraph (2) of subsection (b) of K.S.A. 12-187, and amendments thereto, may fix such rate at 1.25%; the board of county commissioners of Osage or Reno county, for the purposes of paragraph (2) of subsection (b) of K.S.A. 12-187, and amendments thereto, may fix such rate at 1.25% or 1.5%; the board of county commissioners of Cherokee, Crawford, Ford, Saline, Seward or Wyandotte county, for the purposes of paragraph (2) of subsection (b) of K.S.A. 12-187, and amendments thereto, may fix such rate at 1.5%, the board of county commissioners of Atchison county, for the purposes of paragraph (2) of subsection (b) of K.S.A. 12-187, and amendments thereto, may fix such rate at 1.5% or 1.75%; the board of county commissioners of Anderson, Barton, Jefferson or Ottawa county, for the purposes of paragraph (2) of subsection (b) of K.S.A. 12-187, and amendments thereto, may fix such rate at 2%; the board of county commissioners of Marion county, for the purposes of paragraph (2) of subsection (b) of K.S.A. 12-187, and amendments thereto, may fix such rate at 2.5%; the board of county commissioners of Franklin, Linn and Miami counties, for the purposes of paragraph (2) of subsection (b) of K.S.A. 12-187, and amendments thereto, may fix such rate at a percentage which is equal to the sum of the rate allowed to be imposed by the respective board of county commissioners on July 1, 2007, plus up to 1.0%; and the board of county commissioners of Brown county, for the purposes of paragraph (2) of subsection (b) of K.S.A. 12-187, and amendments thereto, may fix such rate at up to 2%;

(b) the board of county commissioners of Jackson county, for the purposes of paragraph (3) of subsection (b) of K.S.A. 12-187, and amendments thereto, may fix such rate at 2%;

(c) the boards of county commissioners of Finney and Ford counties, for the purposes of paragraph (4) of subsection (b) of K.S.A. 12-187, and amendments thereto, may fix such rate at 0.25%;

(d) the board of county commissioners of any county for the purposes of paragraph (5) of subsection (b) of K.S.A. 12-187, and amendments thereto, may fix such rate at a percentage which is equal to the sum of the rate allowed to be imposed by a board of county commissioners on the effective date of this act plus 0.25%, 0.5%, 0.75% or 1%, as the case requires;

(e) the board of county commissioners of Dickinson county, for the purposes of paragraph (7) of subsection (b) of K.S.A. 12-187, and amendments thereto, may fix such rate at 1.5%, and the board of county commissioners of Miami county, for the purposes of paragraph (7) of subsection (b) of K.S.A. 12-187, and amendments thereto, may fix such rate at 1.25%, 1.5%, 1.75% or 2%;

(f) the board of county commissioners of Sherman county, for the purposes of paragraph (8) of subsection (b) of K.S.A. 12-187, and amendments thereto, may fix such rate at 2.25%;

(g) the board of county commissioners of Crawford or Russell county for the purposes of paragraph (9) of subsection (b) of K.S.A. 12-187, and amendments thereto, may fix such rate at 1.5%;

(h) the board of county commissioners of Franklin county, for the purposes of paragraph (10) of subsection (b) of K.S.A. 12-187, and amendments thereto, may fix such rate at 1.75%;

(i) the board of county commissioners of Douglas county, for the purposes of paragraph (11) of subsection (b) of K.S.A. 12-187, and amendments thereto, may fix such rate at 1.25%;

(j) the board of county commissioners of Jackson county, for the purposes of subsection (b)(13) of K.S.A. 12-187, and amendments thereto, may fix such rate at 1.4%;

(k) the board of county commissioners of Sedgwick county, for the purposes of paragraph (3)(C) of subsection (b) of K.S.A. 12-187, and amendments thereto, may fix such rate at 2%;

(l) the board of county commissioners of Neosho county, for the purposes of paragraph (14) of subsection (b) of K.S.A. 12-187, and amendments thereto, may fix such rate at 1.0% or 1.5%;

(m) the board of county commissioners of Saline county, for the purposes of paragraph (15) of subsection (b) of K.S.A. 12-187, and amendments thereto, may fix such rate at up to 1.5%;

(n) the board of county commissioners of Harvey county, for the purposes of paragraph (16) of subsection (b) of K.S.A. 12-187, and amendments thereto, may fix such rate at 2.0%;

(o) the board of county commissioners of Atchison county, for the purpose of paragraph (17) of subsection (b) of K.S.A. 12-187, and amendments thereto, may fix such rate at a percentage which is equal to the sum of the rate allowed to be imposed by the board of county commissioners of Atchison county on the effective date of this act plus 0.25%;

(p) the board of county commissioners of Wabaunsee county, for the purpose of paragraph (18) of subsection (b) of K.S.A. 12-187, and amendments thereto, may fix such rate at a percentage which is equal to the sum of the rate allowed to be imposed by the board of county commissioners of Wabaunsee county on July 1, 2007, plus 0.5%;

(q) the board of county commissioners of Jefferson county, for the purpose of paragraphs (19) and (25) of subsection (b) of K.S.A. 12-187, and amendments thereto, may fix such rate at 2.25%;

(r) the board of county commissioners of Riley county, for the purpose of paragraph (20) of subsection (b) of K.S.A. 12-187, and amendments thereto, may fix such rate at a percentage which is equal to the sum of the rate allowed to be imposed by the board of county commissioners of Riley county on July 1, 2007, plus up to 1%;

(s) the board of county commissioners of Johnson county for the purposes of paragraph (21) of subsection (b) of K.S.A. 12-187, and amendments thereto, may fix such rate at a percentage which is equal to the sum of the rate allowed to be imposed by the board of county commissioners of Johnson county on July 1, 2007, plus 0.25%;

(t) the board of county commissioners of Wilson county for the purposes of paragraph (22) of subsection (b) of K.S.A. 12-187, and amendments thereto, may fix such rate at up to 2%;

(u) the board of county commissioners of Butler county for the purposes of paragraph (23) of subsection (b) of K.S.A. 12-187, and amendments thereto, may fix such rate at a percentage which is equal to the sum of the rate otherwise allowed pursuant to this section, plus 0.25%, 0.5%, 0.75% or 1%;

(v) the board of county commissioners of Barton county, for the purposes of paragraph (24) of subsection (b) of K.S.A. 12-187, and amendments thereto, may fix such rate at up to 1.5%;
(w) the board of county commissioners of Lyon county, for the purposes of paragraph (3)(D) of subsection (b) of K.S.A. 12-187, and amendments thereto, may fix such rate at 1.5%;
(x) the board of county commissioners of Rawlins county, for the purposes of paragraph (3)(E) of subsection (b) of K.S.A. 12-187, and amendments thereto, may fix such rate at 1.75%;
(y) the board of county commissioners of Chautauqua county, for the purposes of paragraph (3)(F) of subsection (b) of K.S.A. 12-187, and amendments thereto, may fix such rate at 2.0%;
(z) the board of county commissioners of Pottawatomie county, for the purposes of paragraph (26) of subsection (b) of K.S.A. 12-187, and amendments thereto, may fix such rate at up to 1.5%;
(aa) the board of county commissioners of Kingman county, for the purposes of paragraph (27) of subsection (b) of K.S.A. 12-187, and amendments thereto, may fix such rate at a percentage which is equal to the sum of the rate otherwise allowed pursuant to this section, plus 0.25%, 0.5%, 0.75%, or 1%;
(bb) the board of county commissioners of Edwards county, for the purposes of paragraph (28) of subsection (b) of K.S.A. 12-187, and amendments thereto, may fix such rate at 1.375%; and
(cc) the board of county commissioners of Rooks county, for the purposes of paragraph (29) of subsection (b) of K.S.A. 12-187, and amendments thereto, may fix such rate at up to 1.5%.
Any county or city levying a retailers' sales tax is hereby prohibited from administering or collecting such tax locally, but shall utilize the services of the state department of revenue to administer, enforce and collect such tax. Except as otherwise specifically provided in K.S.A. 12-189a, and amendments thereto, such tax shall be identical in its application, and exemptions therefrom, to the Kansas retailers' sales tax act and all laws and administrative rules and regulations of the state department of revenue relating to the Kansas retailers' sales tax shall apply to such local sales tax insofar as such laws and rules and regulations may be made applicable. The state director of taxation is hereby authorized to administer, enforce and collect such local sales taxes and to adopt such rules and regulations as may be necessary for the efficient and effective administration and enforcement thereof.
Upon receipt of a certified copy of an ordinance or resolution authorizing the levy of a local retailers' sales tax, the director of taxation shall cause such taxes to be collected within or without the boundaries of such taxing subdivision at the same time and in the same manner provided for the collection of the state retailers' sales tax. Such copy shall be submitted to the director of taxation within 30 days after adoption of any such ordinance or resolution. All moneys collected by the director of taxation under the provisions of this section shall be credited to a county and city retailers' sales tax fund which fund is hereby established in the state treasury, except that all moneys collected by the director of taxation pursuant to the authority granted in paragraph (22) of subsection (b) of K.S.A. 12-187, and amendments thereto, shall be credited to the Wilson county capital improvements fund. Any refund due on any county or city retailers' sales tax collected pursuant to this act shall be paid out of the sales tax refund fund and reimbursed by the director of taxation from collections of local retailers' sales tax revenue. Except for local retailers' sales tax revenue required to be deposited in the redevelopment bond fund established under K.S.A. 74-8927, and amendments thereto, all local retailers' sales tax revenue collected within any county or city pursuant to this act shall be apportioned and remitted at least quarterly by the state treasurer, on instruction from the director of taxation, to the treasurer of such county or city.
Revenue that is received from the imposition of a local retailers' sales tax which exceeds the amount of revenue required to pay the costs of a special project for which such revenue was pledged shall be credited to the city or county general fund, as the case requires.
The director of taxation shall provide, upon request by a city or county clerk or treasurer or finance officer of any city or county levying a local retailers' sales tax, monthly reports identifying each retailer doing business in such city or county or making taxable sales sourced to such city or county, setting forth the tax liability and the amount of such tax remitted by each retailer during the preceding month and identifying each business location maintained by the retailer and such retailer's sales or use tax registration or account number. Such report shall be made available to the clerk or treasurer or finance officer of such city or county within a reasonable time after it has been requested from the director of taxation. The director of taxation shall be allowed to assess a reasonable fee for the issuance of such report. Information received by any city or county pursuant to this section shall be confidential, and it shall be unlawful for any officer or employee of such city or county to divulge any such information in any manner. Any violation of this paragraph by a city or county officer or employee is a class A misdemeanor, and such officer or employee shall be dismissed from office. Reports of violations of this paragraph shall be investigated by the attorney general. The district attorney or county attorney and the attorney general shall have authority to prosecute violations of this paragraph.
History: L. 1978, ch. 56, § 3; L. 1979, ch. 326, § 3; L. 1982, ch. 64, § 3; L. 1983, ch. 58, § 3; L. 1986, ch. 66, § 2; L. 1987, ch. 63, § 2; L. 1989, ch. 57, § 2; L. 1990, ch. 68, § 4; L. 1991, ch. 54, § 4; L. 1992, ch. 198, § 6; L. 1992, ch. 279, § 3; L. 1992, ch. 251, § 2; L. 1993, ch. 240, § 2; L. 1994, ch. 354, § 3; L. 1995, ch. 12, § 3; L. 1995, ch. 246, § 2; L. 1998, ch. 11, § 2; L. 1998, ch. 188, § 3; L. 1999, ch. 1, § 3; L. 2000, ch. 140, § 3; L. 2001, ch. 67, § 1; L. 2002, ch. 185, § 35; L. 2003, ch. 147, § 33; L. 2005, ch. 47, § 2; L. 2005, ch. 186, § 3; L. 2005, ch. 186, § 4; L. 2006, ch. 9, § 2; L. 2006, ch. 191, § 2; L. 2007, ch. 158, § 7; L. 2007, ch. 195, § 53; L. 2008, ch. 100, § 4; L. 2009, ch. 1, § 2; L. 2010, ch. 3, § 2; L. 2010, ch. 83, § 2; L. 2011, ch. 88, § 2; L. 2014, ch. 132, § 2; July 1.

Revisor's Note:

Section was amended by L. 2005, ch. 119, § 2 and L. 2005, ch. 110, § 1, but those versions were repealed by L. 2005, ch. 186, §§ 22 and 23, respectively
Section not reconciled following amendments by three bills during 2006 session, see also 12-189f.
Section was also amended by L. 2007, ch. 153, § 2, but that version was repealed by L. 2007, ch. 195, § 59.

25-2501. Definitions. As used in this act, the words and phrases set out in K.S.A. 25-2502 to 25-2507 shall have the meanings respectively ascribed to them unless the context requires a different meaning.

History: L. 1968, ch. 406, § 1; April 30.

25-2502. Same; dates of primary and general elections specified. (a) "General election" means the election held on the Tuesday succeeding the first Monday in November of even-numbered years, the elections held for officers on the first Tuesday in April, and in the case of special elections of any officers to fill vacancies, the election at which any such officer is finally elected.

(b) "Primary election" means the election held on the first Tuesday in August of even-numbered years, the election held five weeks preceding the election on the first Tuesday in April, and any other preliminary election at which part of the candidates for special election to any national, state, county, township, city or school office are eliminated by the process of the election but at which no officer is finally elected.

History: L. 1968, ch. 406, § 2; L. 1983, ch. 123, § 5; Jan. 27.

25-2503. Same; national, state, county, city, school and township elections; question submitted election. (a) "National election" means the election of members of the United States house of representatives, members of the United States senate or members of the United States presidential electoral college.

(b) "State election" means the election of state officers elected on a statewide basis, members of the house of representatives and state senators, members of the state board of education, district judges, district magistrate judges and district attorneys.

(c) "County election" means the election of such county officers as are provided by law to be elected.

(d) "City election" means the election of such city officers as are provided by law to be elected.

(e) "School election" means the election of members of the governing body of a school district or a community college.

(f) "Township election" means the election of such township officers as are provided by law to be elected.

(g) "Question submitted election" means any election at which a special question is to be voted on by the electors of the state or a part of them.

History: L. 1968, ch. 406, § 3; L. 1970, ch. 143, § 1; L. 1976, ch. 181, § 9; L. 1986, ch. 115, § 77; Jan. 12, 1987.

25-3601. Application to both state and local elections; determination of sufficiency of petitions; signatures; question to be submitted filed with county or district attorney prior to circulation; determination of legality of form; application of other statutes; copies of statutes to be provided. (a) Subject to the provisions of subsection (d), if a petition is required or authorized as a part of the procedure applicable to the state as a whole or any legislative election district or to any county, city, school district or other municipality, or part thereof, the provisions of K.S.A. 25-3601 et seq., and amendments thereto, shall apply. The sufficiency of each signature and the number thereof on any such petition shall be determined in accordance with the provisions of K.S.A. 25-3601 to 25-3607, inclusive, and amendments thereto, by the county election officer or such other official as designated in the applicable statute. Except as provided herein, a copy of any petition requesting an election in any political or taxing subdivision of the state shall be submitted to the office of the county attorney of the county or district attorney of the district in which all or the greater portion of the political or taxing subdivision is located. If a county counselor has been appointed in the county or district, the petition shall be submitted to the county counselor. The petition shall be submitted either by hand-delivery or by certified mail, return receipt requested. Such petition shall contain the question to be submitted at the election. Within five business days following submission of the petition, the county counselor, county attorney or district attorney shall furnish a written advisory opinion as to the legality of the form of the question contained on the petition. There shall be a rebuttable presumption that the form of any question approved by the county counselor, county attorney or district attorney complies with the requirements of this act. If such opinion is not furnished within five days of submission of the question, the form of the question shall be deemed in compliance with the requirements of this act.

If the advisory opinion states that the form of the question contained in the petition does not comply with the requirements of this act, such advisory opinion shall also state specific grounds to support such determination.

Nothing in this subsection shall be construed as prohibiting the circulation of a petition for signatures or the filing of such petition with the county election officer prior to obtaining the advisory opinion required by this subsection.

(b) Any person challenging the validity of the form of a question shall have the burden of proving in the district court that the form of the question is invalid.

(c) The form of any question in a petition requesting an election on or protesting an ordinance, or resolution, adopted by the governing body of any county, city, school district or other municipality shall be presumed to be valid and in compliance with the requirements of K.S.A. 25-3601 et seq., and amendments thereto, if such petition states the title, number and exact language of the ordinance, or resolution, and the title of such petition states:

"Shall the following ordinance, or resolution, become effective?"

(d) When any other statute imposes specific requirements which are different from the requirements imposed by K.S.A. 25-3601 et seq., and amendments thereto, the provisions of the specific statute shall control. The county election officer or other official with whom the petition is required to be filed in accordance with the applicable statute shall give to persons requesting information regarding the filing of petitions a copy of K.S.A. 25-620 and article 36 of chapter 25 of the Kansas Statutes Annotated, and amendments thereto.

(e) Any action challenging the validity of the form of a question in a petition shall be filed in the district court within 20 days after such petition has been filed with the county election officer.

The court shall render an opinion in any action filed to challenge the validity of the form of a question in a petition within 20 days after the date such action is filed with the court.

(f) The provisions of K.S.A. 25-3601 et seq., and amendments thereto, shall not apply to recall petitions as described in K.S.A. 25-4301 et seq., and amendments thereto.

History: L. 1970, ch. 147, § 1; L. 1989, ch. 107, § 4; L. 1992, ch. 194, § 2; L. 2001, ch. 141, § 1; L. 2007, ch. 125, § 3; July 1.

25-3602. Petition documents; where filed; successive filings; contents; verification; petition circulator; withdrawal of signature; void after 180 days; time of election; determination of number of signatures. (a) Each petition shall consist of one or more documents pertaining to a single issue or proposition under one distinctive title. The documents shall be filed with the county election officer or other official, if another official is designated in the applicable statutes. The filing shall be made at one time all in one group. Later or successive filings of documents relating to the same issue or proposition shall be deemed to be separate petitions and not a part of any earlier or later filing.

(b) Unless otherwise specifically required, each petition shall: (1) State the question which petitioners seek to bring to an election in the form of a question as it should appear upon the ballot in accordance with the requirements of K.S.A. 25-620 and K.S.A. 25-3601, and amendments thereto;

(2) name the taxing subdivision or other political subdivision in which an election is sought to be held;

(3) contain the following recital above the spaces provided for signatures: "I have personally signed this petition. I am a registered elector of the state of Kansas and of

_____

(here insert name of political or taxing subdivision)

and my residence address is correctly written after my name."

The recital shall be followed by blank spaces for the signature, residence address and date of signing for each person signing the petition.

When petitioners are required by law to possess qualifications in addition to being registered electors, the form of the petition shall be amended to contain a recital specifying the additional qualifications required and stating that the petitioners possess the qualifications; and

(4) contain a recital in substance as follows, at the end of each set of documents carried by each petition circulator as defined in K.S.A. 2014 Supp. 25-3608, and amendments thereto: "I am the circulator of this petition and I am qualified to circulate this petition and I personally witnessed the signing of the petition by each person whose name appears thereon.

(Signature of circulator)

"

(Circulator's residence address)

The recital of the circulator of each petition shall be verified upon oath or affirmation before a notarial officer in the manner prescribed by K.S.A. 53-501 et seq., and amendments thereto.

(c) Any person who has signed a petition who desires to withdraw such person's name may do so by giving written notice to the county election officer or other designated official not later than the third day following the date upon which the petition is filed.

(d) Any petition shall be null and void unless submitted to the county election officer or other designated official within 180 days of the date of the first signature on the petition.

(e) Unless the governing body of the political or taxing subdivision in which the election is sought to be held authorizes a special election, all elections which are called as a result of the filing of a sufficient petition shall be held at the next succeeding primary or general election as defined by K.S.A. 25-2502, and amendments thereto, in which the political or taxing subdivision is participating.

(f) When a petition requires signatures equal in number to a percentage of the total number of registered voters, such percentage shall be based on the most recent number of registered voters as certified to the office of the secretary of state pursuant to subsection (g) of K.S.A. 25-2311, and amendments thereto.

History: L. 1970, ch. 147, § 2; L. 1976, ch. 190, § 1; L. 1983, ch. 126, § 2; L. 1986, ch. 141, § 1; L. 1990, ch. 129, § 2; L. 1992, ch. 194, § 3; L. 2001, ch. 141, § 2; L. 2001, ch. 211, § 8; L. 2014, ch. 98, § 5; May 15.

Revisor's Note:

Section was also amended by L. 2001, ch. 128, § 7, but that version was repealed by L. 2001, ch. 211, § 18.

CITY OF HAYS
AGENDA ITEM COVER SHEET

COMMISSION AGENDA ITEM NO. 7 **MEETING DATE: 3-24-16**

TOPIC:

Airport Snow Broom Acquisition

ACTION REQUESTED:

Authorize staff to submit an application for federal assistance for the purchase of a snow broom for the Hays Regional Airport, and accept the low bid from M-B Companies, Inc. contingent upon an FAA grant offer. All costs to be funded from the New Equipment Reserve Fund.

NARRATIVE:

The 2016 budget included funds for the purchase of snow removal equipment at the Hays Regional Airport. A snow broom is eligible for FAA Airport Improvement Program funding, which covers 90% of eligible costs. FAA requires actual bids prior to awarding a grant to cover the costs. Bids were received on March 1, 2016, and the total cost of the snow broom including administration and acquisition is $173,354, with the City's share being $17,336. The City's Airport Engineer, Burns & McDonnell, has prepared a grant application to be submitted to FAA to fund 90% of the cost of the snow broom. Staff requests authorization to apply for federal assistance in paying for the snow broom, and acceptance of the bid from M-B Companies, Inc. contingent on FAA grant funding.

PERSON/STAFF MEMBER(S) MAKING PRESENTATION:

Greg Sund, Public Works Director

ADMINISTRATION RECOMMENDATION:

Staff recommends authorizing the submission of an application for federal assistance for the purchase of a snow broom for the Hays Regional Airport and accepting the bid from M-B contingent upon FAA grant funding.

COMMITTEE RECOMMENDATION(S):

N/A

ATTACHMENTS:

Staff Memo
Engineer's Recommendation
Bid Proposal from M-B
FAA Grant Application

Commission Work Session Agenda Memo

From: John Braun, Assistant Director of Public Works

Work Session: March 17, 2016

Subject: Airport Snow Broom Acquisition

Person(s) Responsible: Greg Sund, Director of Public Works

Summary

The 2016 budget included funds for the purchase of snow removal equipment at the Hays Regional Airport. A snow broom is eligible for FAA Airport Improvement Program funding, which covers 90% of eligible costs. FAA requires actual bids prior to awarding a grant to cover the costs. Bids were received on March 1, 2016, and the total cost of the snow broom including administration and acquisition is $173,354, with the City's share being $17,336. The City's Airport Engineer, Burns & McDonnell, has prepared a grant application to be submitted to FAA to fund 90% of the cost of the snow broom. Staff requests authorization to apply for federal assistance in paying for the snow broom, and acceptance of the bid from M-B Companies, Inc. contingent on FAA grant funding.

Background

At the December 3, 2015 Work Session staff presented the proposed procurement of the snow broom to the City Commission and explained how FAA's changing requirements regarding eligible snow removal equipment had changed and why the 2016 CIP listed a truck with rotary broom and the piece of equipment bid is a tow broom.

Discussion

The City's Airport Engineer, Burns & McDonnell (BMcD), prepared bid documents for the snow broom and a grant application to be submitted to FAA to fund 90% of the eligible costs of the snow broom. A work authorization with BMcD was approved in December 2015.

FAA requires actual bids prior to awarding grant money for these types of acquisitions; therefore, bids were received on March 1st; however, there was only one bidder, and that bid was from M-B Companies, Inc. of Chilton, WI at a price of $157,524, which is below the engineer's estimate of $175,000. Delivery would be within 240 calendar days of the Notice to Proceed.

Award of bid would be contingent upon FAA awarding a grant to fund 90% of the eligible cost.

Legal Consideration

There are no known legal obstacles to proceeding as recommended by staff.

Financial Consideration

The 2016 Budget included $17,000 from the New Equipment Reserve Fund to cover the City's share of this acquisition. Including administration/engineering and acquisition, the total cost of the project is $173,354, with the City's share being $17,336, which is slightly over the budgeted amount of $17,000. This expected overage was discussed at the December 3, 2015 Work Session. The New Equipment Reserve has adequate funds to cover the local share, which would be reimbursed to the fund through the annual transfer from the Airport Budget.

The detailed breakout of costs included in the grant application is listed below:

Administration	$2,000
Engineering	$13,830
Equipment (Snow Broom)	$157,524
Total	$173,354
FAA Reimbursement (90% of eligible)	$156,018
City Share (10% of eligible)	$17,336

Options

The City Commission has the following options:

- Consider authorizing staff to submit an application for federal assistance for the purchase of a snow broom for the Hays Regional Airport, and accept the low bid from M-B Companies, Inc. contingent upon FAA grant approval.
- Provide alternate direction to City Staff.

Recommendation

Staff recommends authorizing the submission of an application for federal assistance for the purchase of a snow broom for the Hays Regional Airport and accepting the bid from M-B contingent upon FAA grant funding.

Action Requested

Consider authorizing staff to submit an application for federal assistance for the purchase of a snow broom for the Hays Regional Airport, and accept the low bid from M-B Companies, Inc. contingent upon an FAA grant offer. All costs to be funded from the New Equipment Reserve Fund.

Supporting Documentation

Engineer's Recommendation
Bid Proposal from M-B
FAA Grant Application

March 4, 2016

Mr. Greg Sund
Director of Public Works
City of Hays
1002 Vine Street
Hays, Kansas 67601

Re: Engineer's Recommendation for the Procure Snow Removal Equipment at Hays Regional Airport
AIP No. 3-20-0028-33
BMcD No. 89419

Dear Mr. Sund:

Burns & McDonnell has tabulated and confirmed the bid received for the aforementioned project and dated March 1, 2016. The tabulation summary of bids is provided in Table A. A detailed tabulation of bid is enclosed for your review.

TABLE A

ENGINEER'S EVALUATION OF SNOW REMOVAL EQUIPMENT (RUNWAY BROOM) BIDS		
Type of Bid	**Burns & McDonnell**	**M-B Companies, Inc.**
Base Bid	$190,000.00	$157,524.00

The Bidder provided documentation for the items noted below. A copy of each item is attached herein.

1. Contractor's Statement of Qualifications
2. Manufacturing details
3. Signed Acknowledgement of Addendum No. 1
4. Signed Proposal Form
5. Signed Buy American Certification (selected Type 3 waiver, included component table)
6. Signed DBE Utilization Statement and Letter of Intent with Good Faith Effort documents
7. Bid Bond (5%)

There were no mathematical errors on the submitted proposal forms. Based on the bid tabulations, the apparent low bidder for the runway broom is M-B Companies.

The Disadvantage Business Enterprise (DBE), goal for the equipment acquisition is 0.0%. M-B's proposed value of DBE participation is 0.0% of the Base Bid. The amount proposed does meet the target goal.

There was one bid received for this equipment procurement. Burns & McDonnell completed a single bid analysis in accordance with AIP Sponsor Guide – 1010 (Single Bids). On March 4, 2016, a telephone interview was conducted with Wausau Everest's Mr. Chuck Reichwald. The purpose of the call was to confirm the planholder's understanding of the equipment, inquire why Wausau did not submit a bid, and

determine if the specifications could not be met by their equipment. Mr. Reichwald indicated there were no misunderstandings in the specifications regarding the runway broom and that the specifications could be met under normal circumstances. However, at this time, Wausau's engine for the specified broom is not available. It is undergoing a transition to meet the Environmental Protection Agency (EPA) Tier 4 Engine Emission Requirements and will not be available for purchase until next year. Mr. Reichwald also indicated that a proposal price of approximately $157,600 is 'fair and reasonable' for the specified runway broom. Additionally, Burns & McDonnell has completed review of the project manual and determined the specifications did not exclude any potential bidders for this equipment. Based on the engineer's estimate, bid received, and the phone conversation with Mr. Reichwald, it is confirmed that the proposed bid cost from M-B companies is fair and reasonable. A cost evaluation is attached for reference.

Burns & McDonnell also conducted a phone interview with Mr. Steve Mueller of M-B Companies. The purpose of the call was to reaffirm the Bidder's understanding of the equipment and clarify any outstanding items or concerns of the apparent low bidder. The topics of discussion included the following:

1. Discussion of insurance requirements. The Contractor confirmed their company will have no issues meeting the contract amounts.
2. Schedule and delivery of equipment. There are no issues with the manufacturer meeting the proposed contract time.
3. Qualifications of proposed equipment. There are no proposed qualifications by the manufacturer for the equipment.
4. Items of Concerns as Stated by the Contractor: The Contractor indicates there are no questions or concerns regarding their bid as submitted.

Based on the results of the tabulation of bids, review of the bid documentation, the single bid analysis, and discussions with the Apparent Low Bidder, Burns & McDonnell recommends the following awards in Table B subject to available funding.

TABLE B

SUMMARY OF ENGINEER'S VEHICLE RECOMMENDATION	
Bid Type Award	**M-B Companies, Inc.**
Base Bid	$157,524.00

I trust this information is sufficient for your purposes. If there are any additional questions or comments regarding this information, please contact me at 816-448-7444.

Sincerely,

Raymond J. Ryan, P.E.
Civil Engineer

cc: Dan Wilson (FAA Central Region), Dave Hadel (Burns & McDonnell)
Enclosures: Bid Tabulation, Single Bid Analysis Cost Comparison, M-B Companies' Bid Documents

PROCURE SNOW REMOVAL EQUIPMENT BID TABULATION
HAYS REGIONAL AIRPORT
HAYS, KS
BASE BID
AIP No. 3-20-0028-33
Burns & McDonnell No. 89419
March 4, 2016

ITEM NO.	DESCRIPTION OF WORK	UNITS	ESTIMATED QUANTITY	Burns & McDonnell		M-B Companies, Inc.	
				UNIT COST	TOTAL COST	UNIT COST	TOTAL COST
1	Snow Removal Equipment - Airport Runway Broom (12-foot)	EA	1.00	$190,000.00	$190,000.00	$157,524.00	$157,524.00
						Bid Read	$157,524.00
				TOTAL COST OF BASE BID	**$190,000.00**	**Tabulated**	**$157,524.00**

BURNS McDONNELL

SINGLE BID ANALYSIS
HAYS REGIONAL AIRPORT
HAYS, KANSAS
PROCURE SNOW REMOVAL EQUIPMENT BID TABULATION
BASE BID
PROJECT NO: 3-20-0028-33
Burns & McDonnell No. 89419
Bid Date: March 1, 2016

				Burns & McDonnell (BMcD)		M-B Companies, Inc.		DIFFERENCE IN BMcD AND M-B UNIT AND TOTAL COSTS	
ITEM NO.	DESCRIPTION OF WORK	UNITS	ESTIMATED QUANTITY	UNIT COST	TOTAL COST	UNIT COST	TOTAL COST	UNIT COST (M-B - BMcD)	TOTAL COST (M-B - BMcD)
1	Snow Removal Equipment - Airport Runway Broom (12-foot)	EA	1	$190,000.00	$190,000.00	$157,524.00	$157,524.00	($32,476.00)	($32,476.00)
						Bid Read	$157,524.00		
				TOTAL COST OF BASE BID	**$190,000.00**	**Tabulated**	**$157,524.00**	**TOTAL DELTA**	**($32,476.00)**

NOTES:
1. During a phone conversation with Mr. Chuck Reichwald of Wausau Everest Co., Inc., it was determined that an approximate cost of $157,600 was fair and reasonable for this equipment.

BURNS McDONNELL

M-B Companies, Inc.

Corporate Office
1615 Wisconsin Avenue
P.O. Box 200
New Holstein, WI 53061
800.558.5800

Airport Maintenance Products
1200 Park Street
Chilton, WI 53014
800.558.5800

Attachments
1615 Wisconsin Avenue
New Holstein, WI 53061
800.558.5800

Multi-Service Vehicle
1615 Wisconsin Avenue
New Holstein, WI 53061
800.558.5800

Pavement Marking-East
79 Montgomery Street
Montgomery, PA 17752
888.323.2900

Pavement Marking-West
2490 Ewald Avenue SE
Salem, OR 97302
800.253.2909

Replacement Brushes
1217 E Chestnut Street
Chilton, WI 53014
800.558.5800

www.m-bco.com

Hays Regional Airport, City of Hays, Kansas
AIP No. 3-20-0028-33, Procure Snow Removal Equipment
Bid Opening Date: March 01, 2016, 3:00PM

February 19, 2016

City of Hays
1507 Main St
Hays, Kansas 67601

Dear Sir / Madam:

Thank you for allowing the M-B Companies, Inc. to bid on this project.

M-B Companies confirms that the equipment proposed in this bid meets or exceeds the applicable standards of the FAA Advisory Circular 150/5220-20A and SAE ARP5564. Any exceptions to the published specifications are detailed on the enclosed Clarifications and Information sheets. Please see the additional enclosed information.

We have been designing, manufacturing, integrating, and servicing Airport snow removal equipment for many years with great success. The enclosed customer reference listing prominent airports can attest to this fact. Thus, M-B has successfully provided equipment of similar size and specification to that specified in the bid specifications.

M-B Companies, Inc. will stand behind your equipment and will support your efforts. Please check our website at www.m-bco.com where a history of our 100-year tradition is described. All questions, concerns, issues or omissions that need to be addressed can be forwarded to me. My direct telephone number is 920-898-1080. Thank you again for allowing us to participate in this project.

Sincerely,

Steve Karlin

Steve Karlin

Senior Vice President

Quality you can see. People you can trust.™

Limited Warranty – Hays Regional Airport, KS

Limited Warranty: Subject to the limitations set forth herein, M-B Companies, Inc. Airport Maintenance Products division ("M-B") warrants its products to be free from defects in material and workmanship for one year from the date of delivery of the product to its original owner. Parts used for warranty repairs shall be warranted to the end of the Limited Warranty period or ninety days, whichever is longer. This warranty is not transferable without the written consent of M-B.

Notice: M-B's obligations under this Limited Warranty are conditioned on M-B receiving, within the warranty period, written notice from Buyer specifying the nature of any alleged defect and requesting corrective action by Seller.

Remedies: M-B, at its option, will repair or replace, or provide a credit to the buyer for defective warranted items. If requested by M-B, products or parts for which a warranty claim is made shall be returned, transportation prepaid by M-B, to M-B's factory. Buyer shall not return any product for repair, replacement or credit without M-B's advance written consent.

Other Manufacturer's Warranty: On products furnished by M-B, but manufactured by any other manufacturer, the warranty of said manufacturer, if any, will be assigned to the buyer, if the said warranty is assignable. This includes any portion of said manufacturer's warranty which is longer than the M-B standard warranty. However, M-B does not represent or guarantee that the other manufacturer will comply with any of the terms of their warranty.

Exclusions: Any improper use, operation beyond capacity, or substitution of parts not approved by M-B, or alteration or repair by others in such a manner as in M-B's judgment materially and/or adversely affects the product shall void this warranty. This warranty does not apply to defects caused by damage or unreasonable use while in the possession of the owner, including but not limited to: failure to provide reasonable and necessary maintenance, normal wear, routine tune-ups or adjustments, improper handling or accidents, operation at speed or load conditions contrary to published specifications, improper or insufficient lubrication, or improper storage.

The batteries, tires, rubber materials, brushes and material normally consumed in operation, are excluded from this warranty

Limitations of liability: M-B shall not be liable for any incidental, consequential, punitive or special damages of any kind, including, but not limited to, consequential labor costs, transportation charges, and rental costs, in connection with the repair or replacement of defective parts, or lost time or lost profits or expense which may have accrued because of said defect.

M-B disclaims all other warranties, whether expressed or implied, including but not limited to any implied warranty of merchantability or fitness for a particular purpose. This warranty is the exclusive remedy of buyer. This warranty cannot be extended, broadened or changed in any respect except in writing by an authorized officer of M-B.

Notwithstanding anything in this warranty to the contrary, in no event shall M-B's total liability hereunder exceed the purchased price of the particular product.

Airport Maintenance Products

3600-TOWGA
Tow Airport Broom

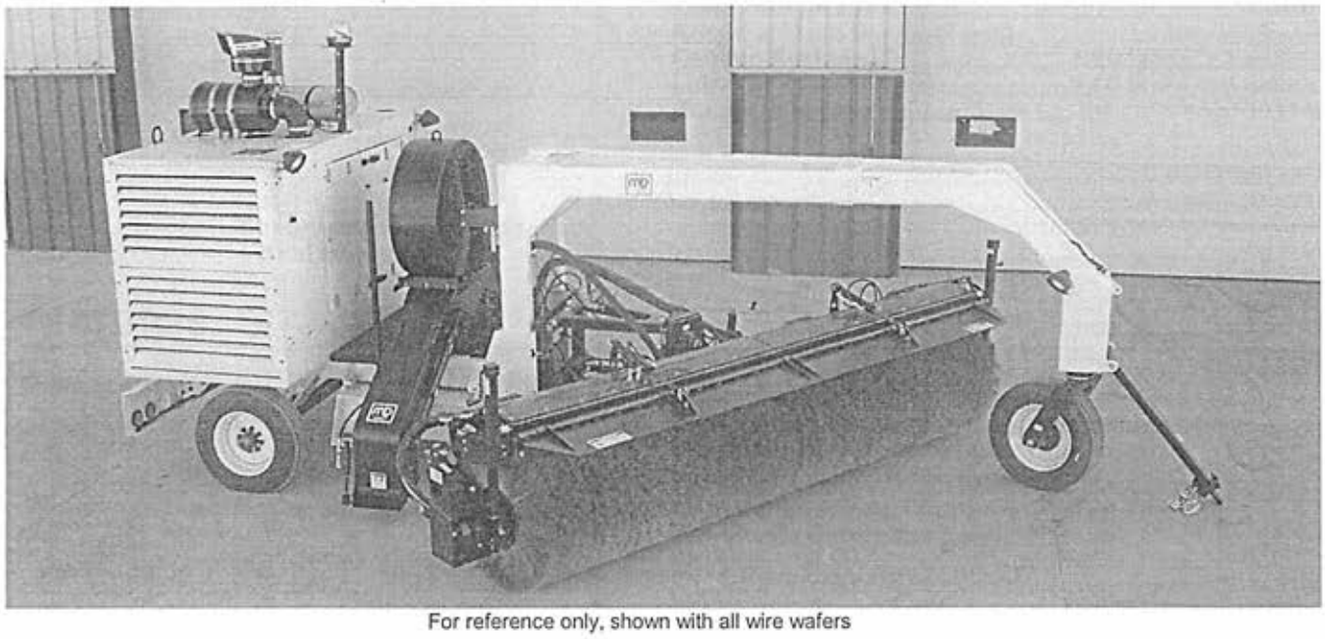

For reference only, shown with all wire wafers

- Multiple towing chassis configurations of adequate size, axle and horsepower ratings.
- Broom package is self sufficient in that no power or controls are required from the chassis
- 36" diameter @ 12 foot broom length. All poly wafers
- Caterpillar C9, 300HP, electronic turbocharged industrial diesel engine, 8.8 liter, EPA emission certified
- 516 rpm broom with 1,839 ft-lbs of available torque at 4640 psi maximum working pressure
- Single impeller forced air blower. 20,000 CFM @ 320 MPH
- Hydrostatic drive, infinitely variable speed pumps and fixed displacement motors for broom head and blower
- 100 gallon fuel tank for 12 hours of operation
- Single wheel axle: 12,000 pound capacity with air brake system.
- Operator friendly, cab portable operator's control box, microprocessor CAN bus controls with MDC (Monitor, Diagnose, Control) color screen display.
- Free floating broom head hitch for superior broom pattern control, improved tractive effort, braking, steerability and overall handling of the broom chassis
- Broom oscillation of 10 degrees (+5, -5) permitting broom head tilt independent of chassis to compensate for surface variations to minimize brush pattern variation during operation.
- Power transmitted to the broom core via keyed tapered hubs to prevent any looseness in the connection for vibration concerns. Molded urethane drive cogs for torque transmission. Hardened steel pilot plates and core sprockets to support the radial loads
- Includes Front Nose Wheel (shown) hitch to chassis
- Includes hydraulic jack and 20 lb fire extinguisher

M-B Companies, Inc. / Airport Maintenance Products
1200 Park Street / Chilton, Wisconsin 53014
1-800-558-5800 / Fax: 920-849-2629 / sales@m-bco.com / www.m-bco.com
ISO 9001:2008 Certified
Verisys Registrars
10/14
In the interest of continuous product improvement, M-B Reserves the right to change specifications without notice.

STANDARD ENGINE EQUIPMENT

Air Inlet System

Air to air aftercooled (ATAAC)
Turbocharged

Control System

Electronic governing, PTO speed control
Programmable ratings
Cold mode start strategy
Automatic altitude compensation
Power compensation for fuel temperature
Programmable low and high idle and total engine limit
Electronic diagnostics and fault logging
Engine monitoring system
J1939 Broadcast (diagnostic and engine status)
ADEM™ A4

Cooling System

Thermostats and housing, vertical outlet
Jacket water pump, centrifugal
Water pump, inlet

Exhaust System

Exhaust manifold, dry
Optional exhaust outlet

Flywheels and Flywheel Housing

SAE No. 1 Flywheel housing

Fuel System

HEUI injection
Fuel filter, secondary (2 micron high performance)
Fuel transfer pump
Fuel priming pump
ACERT™ Technology

Lube System

Crankcase breather
Oil cooler
Oil filler
Oil filter
Oil pan front sump
Oil dipstick
Oil pump (gear driven)

General

Paint, Caterpillar Yellow
Vibration damper
Lifting eyes

PERFORMANCE CURVES

IND - B - DM8117-01

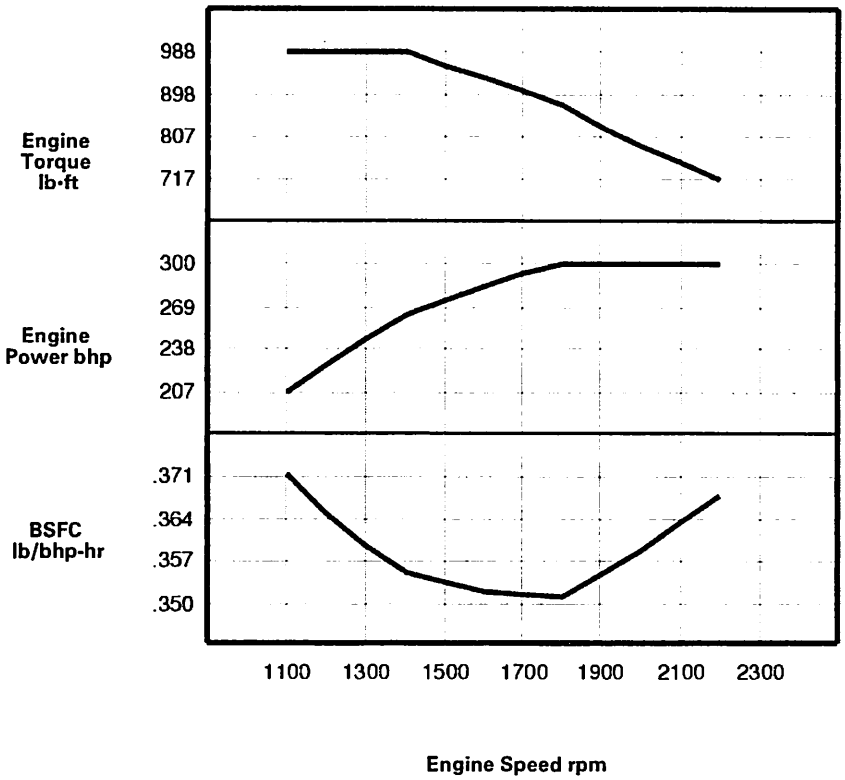

English

Engine Speed rpm	Engine Power bhp	Engine Torque lb·ft	BSFC lb/bhp-hr	Fuel Rate gal/hr
2200	300	717	.368	15.8
2100	300	752	.363	15.6
2000	300	789	.359	15.4
1900	300	830	.355	15.2
1800	300	876	.351	15.1
1700	293	906	.351	14.7
1600	284	933	.352	14.3
1500	274	959	.353	13.8
1400	264	988	.355	13.4
1300	244	988	.359	12.5
1200	226	988	.365	11.8
1100	207	988	.371	11.0

RATINGS AND CONDITIONS

IND - B For service where power and/or speed are cyclic (time at full load not to exceed 80%).

Engine Performance Diesel Engines — 7 liter and higher All rating conditions are based on SAE J1995, inlet air standard conditions of 99 kPa (29.31 in. Hg) dry barometer and 25°C (77°F) temperature. Performance measured using a standard fuel with fuel gravity of 35° API having a lower heating value of 42,780 kJ/kg (18,390 btu/lb) when used at 29° C (84.2° F) with a density of 838.9 g/L.

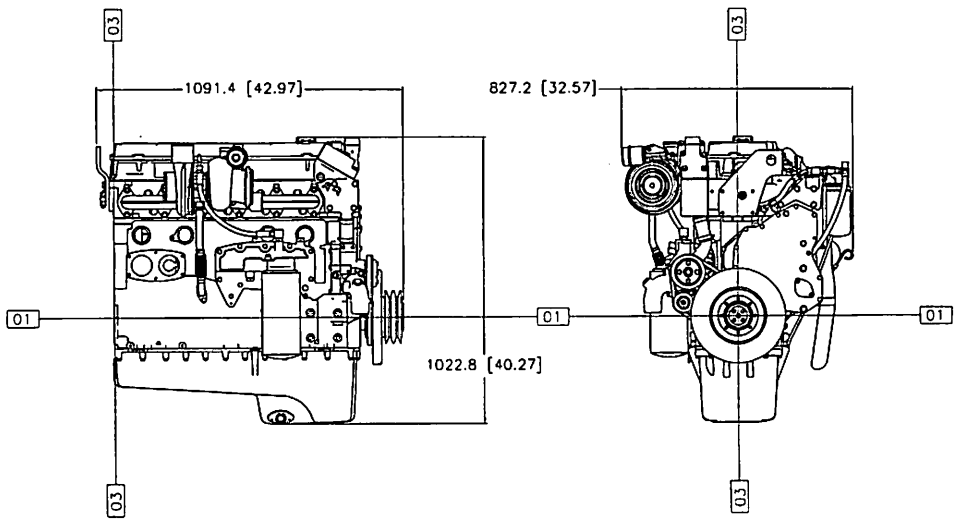

Engine Dimensions	
(1) Length	1091.4 mm (42.97 in)
(2) Width	827.2 mm (32.57 in)
(3) Height	1022.8 mm (40.27 in)

Note: Do not use for installation design. See general dimension drawings for detail (Drawing # 2651026).

Performance Number: DM8117-01

Feature Code: C09DI11 Arr. Number: 2524430

Materials and specifications are subject to change without notice.

16289357

© 2012 Caterpillar

All rights reserved.

The International System of Units (SI) is used in this publication.

CAT, CATERPILLAR, their respective logos, "Caterpillar Yellow," the "Power Edge" trade dress, as well as corporate and product identity used herein, are trademarks of Caterpillar and may not be used without permission.

Verisys Registrars®

Helpful Auditing

International Accreditation Board

IAB Accreditation #7C558984

Certificate of Registration

The Management System of

M-B Companies, Inc.

1200 South Park Street Chilton, Wisconsin 53014 USA

has been assessed and certified by Verisys Registrars as meeting the requirements of

ISO 9001:2008

for the following scope of registration:

M-B Airport Maintenance Products Business Unit designs, provides fabricated parts, assembles supplies, and supports snow removal attachments and vehicles and surface cleaning equipment with which airports and other entities maintain transportation infrastructure.

Certificate Number:

Original Approval	2/3/2014
Certificate Issued	2/3/2014
Certificate Expires	3/5/2017

M020314

The use of this certification mark indicates accreditation in respect to those activities covered by registration Certificate Number: M020314

Rick Breden

On behalf of Verisys Registrars – Rick Breden, President

This certificate is valid only if the company maintains its management system to the required standard and to conditions and schedules established by Verisys Registrars. In issuing this certificate Verisys Registrars assumes no liability to any party.

COMMERCIAL INDUSTRIAL HVAC
DILLETT
MECHANICAL SERVICE

DILLETT MECHANICAL SERVICE
21385 W. LINCOLN AVE.
NEW BERLIN, WI 53146
BUS. (262) 650-0770
FAX (262) 650-0880

AIR CONDITIONING • HEATING • MECHANICAL SYSTEMS • CONTROLS

AIR BLOWER CERTIFICATION

Product: MB Runway Broom /Airblower, 15P 1X

Fan PN: 250-130642

Blower Wheel SN: 26285-3

Broom SN: 15-0442

Fan RPM: 2900

Air Flow Instrument: Dwyer VT-200 Anemometer

Average Air Flow per fan (measured): 20,034 CFM

Total Air Flow (1 impeller): **20,034 CFM**

Air Flow Velocity: Discharge Area= $\frac{12.75 \text{ inches} \times 4.0 \text{ inches} \times 2}{144}$ =0.708 sq ft. (area)

$$\frac{\text{CFM}}{\text{Area}} = \frac{20{,}034 \text{ CFM}}{0.708 \text{ sq. ft.}} = 28{,}283 \text{ ft/min.}$$

$$\frac{28{,}283 \text{ ft/min.}}{1\text{-minute}} \times \frac{1\text{-mile}}{5{,}280\text{ft}} \times \frac{60 \text{ min.}}{1\text{-hr}} = \mathbf{322\ MPH}$$

Tested By: Dillett Mechanical Service, Inc.
Date: March 22, 2005
Dillett Mechanical Service, Inc. Testing Technician: Jerry Krysak
Test Witnessed By: Jim Steiner, Chief Engineer, MB Company

3600-TOWGA Runway Broom Customer Reference List

Kansas City Downtown Airport
Contact: Michael Roper
Telephone #: 816-513-0789
Two units

Akutan Airport, Alaska
Contact: Steve Berminger
Telephone #: 907-581-1786
One unit

Sioux Lookout Municipal Airport
Contact: Rick Reed
Telephone #: 807-737-3089
One Unit

Ottawa MacDonald-Cartier International Airport, ON Canada
Contact: Robert Fisher
Telephone #: 613-248-2000
One unit

Red Deer Regional Airport, AB Canada
Contact: Otto Epp
Telephone #: 403-886-4219
One unit

M-B Companies, Inc.

Corporate Office
1615 Wisconsin Avenue
P.O. Box 200
New Holstein, WI 53061
800.558.5800

Airport Maintenance Products
1200 Park Street
Chilton, WI 53014
800.558.5800

Attachments
1615 Wisconsin Avenue
New Holstein, WI 53061
800.558.5800

Multi-Service Vehicle
1615 Wisconsin Avenue
New Holstein, WI 53061
800.558.5800

Pavement Marking-East
79 Montgomery Street
Montgomery, PA 17752
888.323.2900

Pavement Marking-West
2490 Ewald Avenue SE
Salem, OR 97302
800.253.2909

Replacement Brushes
1217 E Chestnut Street
Chilton, WI 53014
800.558.5800

M-B Companies Airport Maintenance Products Capabilities

M-B Companies have been in business since 1907. That is over 100 years. We are privately held and have four facilities. A complete description of our company and history is stated at: www.m-bco.com

The M-B Airport Maintenance Products manufacturing facility is in Chilton, WI. The Chilton plant was built in1974 and has 45,000 square feet under the roof. We also just completed a 11,250 square feet plant expansion. We are situated on 20 acres of land. The flow through the plant is determined by "A place for everything and everything in its place. Put the parts where the worker needs them." Within the past few years, M-B has successfully fulfilled numerous large orders to major airports around the world. Based on our experience with large and small orders, both whole goods and parts orders, we have no problem meeting the requirements and deliveries of providing products and services for airport snow removal operations.

Photo of the M-B Chilton plant

As stated above, M-B has been in business for many years. We have been designing and manufacturing airport snow removal equipment power brooms for over 40 years. A sample location listing of all airport runway brooms shipped from Chilton the last ten years is available upon request.

Enclosed is a list (with years of industry experience) of key M-B employees. We are all available to service you the customer. Our goal is to have all critical parts on hand and all service parts orders shipped within 24 hours. When time is of the essence, counter to counter or overnight delivery is available. When required, M-B's dedicated factory service technicians can be at your facility within 24 hours.

We have been manufacturing Airport Maintenance Products for many years with great success proven by repeat purchase orders received and fulfilled with great customer satisfaction. It takes experience and dedication to obtain reliable, high performing equipment such as M-B equipment.

M-B Companies, Inc.

Corporate Office
1615 Wisconsin Avenue
P.O. Box 200
New Holstein, WI 53061
800.558.5800

Airport Maintenance Products
1200 Park Street
Chilton, WI 53014
800.558.5800

Attachments
1615 Wisconsin Avenue
New Holstein, WI 53061
800.558.5800

Multi-Service Vehicle
1615 Wisconsin Avenue
New Holstein, WI 53061
800.558.5800

Pavement Marking-East
79 Montgomery Street
Montgomery, PA 17752
888.323.2900

Pavement Marking-West
2490 Ewald Avenue SE
Salem, OR 97302
800.253.2909

Replacement Brushes
1217 E Chestnut Street
Chilton, WI 53014
800.558.5800

Key Personnel Airport Maintenance Products

Steve Karlin (31 years of industry experience)
Senior Vice President
Direct Line: 920-898-1080 | Fax: 920-849-2629 | Cell: 920-242-1647
steve.karlin@m-bco.com

Scott Scharinger (30 years of industry experience)
Western Region Sales and Service Manager
Cell: 920-242-4134 | Fax: 920-849-2629
scott.scharinger@m-bco.com

Allen Jones (23 years of industry experience)
Midwest Region Sales Manager
Cell: 920-242-9692 | Fax: 920-849-2629
ajones@m-bco.com

Alan Luke (30 years of industry experience)
Eastern Region and Federal Government Sales Manager
Cell: 804-306-5550 | Fax: 920-849-2629
alan.luke@m-bco.com

Kevin Gaddis (25 years of industry experience)
Field Service Technician
Cell: 920-522-2094 | Fax: 920-849-2629
kevin.gaddis@m-bco.com

Robert Nugent (17 years of industry experience)
Field Service Technician
Cell: 920-522-3660 | Fax: 920-849-2629
rnugent@m-bco.com

Dean Grantz (6 years of industry experience)
Field Service Technician
Cell: 920-522-3347 | Fax: 920-849-2629
dgrantz@m-bco.com

Doug Wallander (27 years of industry experience)
After Market Service & Training Manager and Field Service
Direct Line: 920-898-1009 | Fax: 920-849-2629
dwallander@m-bco.com

Steve Mueller (29 years of industry experience)
Technical Sales Manager
Direct Line: 920-898-1077 | Fax: 920-849-2629
steve.mueller@m-bco.com

M-B Companies, Inc.

Bill Hecker (36 years of industry experience)
Technical Sales Coordinator
Direct Line: 920-898-1018 | Fax: 920-849-2629
bhecker@m-bco.com

Aaron Schulz (19 years of industry experience)
Product Support/Parts Manager
Direct Line: 920-898-1022 | Fax: 920-849-2629
aaron.schulz@m-bco.com

James L. Steiner (27 years of industry experience)
Chief Engineer
Direct Line: 920-898-1029 | Fax: 920-849-2629 | Cell: 920-254-9582
jim.steiner@m-bco.com

Brian Rasmussen (13 years industry experience)
Engineering Manager
Direct Line: 920-898-1042 | Fax: 920-849-2629 | Cell: 920-254-9581
brian.rasmussen@m-bco.com

David Woelfel (28 years Quality experience)
Quality Manger
Direct Line: 920-898-1095 | Fax: 920-849-2629
david.woelfel@m-bco.com

Bill Hoff (34 years of Assembly experience)
Assembly Manager
Direct Line: 920-898-1031 | Fax: 920-849-2629
bill.hoff@m-bco.com

Corporate Office
1615 Wisconsin Avenue
P.O. Box 200
New Holstein, WI 53061
800.558.5800

Airport Maintenance Products
1200 Park Street
Chilton, WI 53014
800.558.5800

Attachments
1615 Wisconsin Avenue
New Holstein, WI 53061
800.558.5800

Multi-Service Vehicle
1615 Wisconsin Avenue
New Holstein, WI 53061
800.558.5800

Pavement Marking-East
79 Montgomery Street
Montgomery, PA 17752
888.323.2900

Pavement Marking-West
2490 Ewald Avenue SE
Salem, OR 97302
800.253.2909

Replacement Brushes
1217 E Chestnut Street
Chilton, WI 53014
800.558.5800

www.m-bco.com

Quality you can see. People you can trust.™

PROCURE SNOW REMOVAL EQUIPMENT
HAYS REGIONAL AIRPORT
AIP No. 3-20-0028-33
BMcD Project No. 89419

ADDENDUM NO. 1

February 19, 2016

Addendum No. 1 consists of the following changes or clarifications.

1. **Change: Contract Time.** The contract time of 180 calendar days stated in the Project Manual is changed to 240 calendar days.

   Delivery of the vehicle/equipment shall be made within the 240 calendar days of the date of the Notice-to-Proceed.

2. **Clarification: Page 36, #12, Additional Features and Pg. 70, A6-12, D, Optional equipment.**
   Question: Are the noncorrosive fenders required if the tires are located under the engine pallet?
   Response: No. The purpose of the fenders is to reduce debris from the tires during snow removal. This is accomplished when the tires are located under the engine pallet.

3. **Clarification: Page 70, A6-12, C, Optional equipment.**
   Question: Is a dual front fork wheel required?
   Response: A front nose wheel is required; however, the dual front fork wheel is listed as an optional equipment piece and is not specifically required. Both single and dual nose wheel configurations are acceptable.

Acknowledge receipt and acceptance of this addendum in the appropriate space below.

Raymond Ryan, P.E.
Civil Engineer
Burns & McDonnell

M-B Companies, Inc.
Name of Firm

Steve Karlin
Signature of Authorized Person of Above Firm

Senior Vice President
Title

2/26/16
Date

PROPOSAL FORM
AIP No. 3-20-0028-33

TO: City of Hays, Kansas

The undersigned, in compliance with the request for bids for acquiring the following equipment:

Snow Removal Equipment at Hays Regional Airport, Hays, Kansas

hereby proposes to furnish all labor, permits, material, machinery, tools, supplies and equipment to faithfully perform all work required for the Project in accordance with the Project Manual and issued Addenda within the specified time of performance for the following prices:

BASE BID

Item No.	Spec. No.	Description	Quantity	Unit	Unit Price		Extension	
1	-	Snow Removal Equipment – Airport Runway Broom (12-ft)	1	LS	157, 524	00	157, 524	00

TOTAL BASE BID *(Numeral Format)* ..... $157, 524 . 00

TOTAL BASE BID *(Written Format):* One hundred Fifty Seven thousand, Five hundred Twenty Four Dollars And zero Cents.

ACKNOWLEDGEMENTS BY BIDDER

a. The Bidder acknowledges and accepts that the Bid Documents are comprised of the documents identified within the Instructions to Bidders. The Bidder further acknowledges that each the individual documents that comprise the Bid Documents are complementary to one another and together establishes the complete terms, conditions and obligations of the successful Bidder.

b. As evidence of good faith in submitting this proposal, the undersigned encloses a bid guaranty in the form of a certified check or **Bid Bond in the amount of 5% of the bid price.** The Bidder acknowledges and accepts that refusal or failure to accept award and execute a contract within the terms and conditions established herein will result in forfeiture of the bid guaranty to the owner as a liquidated damage.

c. The BIDDER acknowledges and accepts the Owner's right to reject any or all bids and to waive any minor informality in any Bid or solicitation procedure.

d. The Bidder acknowledges and accepts the Owner's right to hold all Proposals for purposes of review and evaluation and not issue a notice-of-award for a period not to exceed **one-hundred twenty (120) calendar days** from the stated date for receipt of bids.

e. The undersigned agrees that upon written notice of award of contract, he or she will execute the contract within **thirty (30) calendar days** of the notice-of-award and furthermore and provide executed bond(s) within **fifteen (15) calendar days** from the date of contract execution. The undersigned accepts that failure to execute the contract and provide the required bonds within the stated timeframe shall result in forfeiture of the bid guaranty to the owner as a liquidated damage.

f. Time of Performance: By submittal of this proposal, the undersigned acknowledges and agrees to commence work within **ten (10) calendar days** of the date specified in the written "Notice-to-Proceed" as issued by the Owner. The undersigned further agrees to complete the Project within **180 calendar days** from the commencement date specified in the Notice-to-Proceed or Purchase Order.

g. The undersigned acknowledges and accepts that for each and every calendar day the project remains incomplete beyond the contract time of performance, the Contractor shall pay the non-penal amount of **$500 per calendar day** as a liquidated damage to the Owner.

h. The Bidder acknowledges that the Owner has established a contract Disadvantaged Business Enterprise goal of **0.0 percent** for this project. The Bidder acknowledges and accepts the requirement to apply and document good faith efforts, as defined in Appendix A, 49 CFR Part 26, for subcontracting a portion of the prime contract to certified Disadvantaged Business Enterprises (DBE), as defined in 49 CFR Part 26 for purposes of meeting the Owner's established goal. The Bidder, in complying with this requirement, proposes participation by Disadvantaged Business Enterprises as stated on the attached forms, "Utilization Statement" and "Letter of Intent".

i. The undersigned acknowledges receipt of the following addenda:

Addendum Number 1 dated 2/19/16 Received Steve Karlin

Addendum Number _____ dated _____ Received _____.

Addendum Number _____ dated _____ Received _____.

REPRESENTATIONS BY BIDDER

By submittal of a proposal (bid), the Bidder represents the following:

a. The Bidder has read and thoroughly examined the bid documents including all authorized addenda.

b. The Bidder has a complete understanding of the terms and conditions required for the satisfactory performance of project work.

c. The Bidder has found no errors, conflicts, ambiguities or omissions in the project documents, except as previously submitted in writing to the owner that would affect cost, progress or performance of the work.

d. The Bidder is familiar with all applicable Federal, State and local laws, rules and regulations pertaining to execution of the contract and the project work.

e. The Bidder has complied with all requirements of these instructions and the associated project documents.

CERTIFICATIONS BY BIDDER

a. The undersigned hereby declares and certifies that the only parties interested in this proposal are named herein and that this proposal is made without collusion with any other person, firm or corporation. The undersigned further certifies that no member, officer or agent of Owner's has direct or indirect financial interest in this proposal.

b. **Certification of Non-Segregated Facilities:** (41 CFR Part 60-1.8)
The Bidder, as a potential federally-assisted construction Contractor, certifies that it does not maintain or provide, for its employees, any segregated facilities at any of its establishments and that it does not permit its employees to perform their services at any location, under its control, where segregated facilities are maintained. The Bidder certifies that it will not maintain or provide, for its employees, segregated facilities at any of its establishments and that it will not permit its employees to perform their services at any location under its control where segregated facilities are maintained. The Bidder agrees that a breach of this certification is a violation of the Equal Opportunity Clause, which is to be incorporated in the contract.

As used in this certification, the term "segregated facilities" means any waiting rooms, work areas, restrooms, and washrooms, restaurants and other eating areas, timeclocks, locker rooms and other storage or dressing areas, parking lots, drinking fountains, recreation or entertainment areas, transportation, and housing facilities provided for employees which are segregated on the basis of race, color, religion, or national origin because of habit, local custom, or any other reason. The Bidder agrees that (except where it has obtained identical certifications from proposed subcontractors for specific time periods) it will obtain identical certifications from proposed subcontractors prior to the award of subcontracts exceeding $10,000 which are not exempt

from the provisions of the Equal Opportunity Clause and that it will retain such certifications in its files.

c. **Trade Restriction Certification:** (49 CFR Part 30)
The Bidder, by submission of an offer certifies that it:

1. is not owned or controlled by one or more citizens of a foreign country included in the list of countries that discriminate against U.S. firms published by the Office of the United States Trade Representative (USTR);

2. has not knowingly entered into any contract or subcontract for this project with a person that is a citizen or national of a foreign country on said list, or is owned or controlled directly or indirectly by one or more citizens or nationals of a foreign country on said list;

3. has not procured any product nor subcontracted for the supply of any product for use on the project that is produced in a foreign country on said list.

d. **Certification Regarding Debarment, Suspension, Ineligibility and Voluntary Exclusion:** (49 CFR Part 180 (Subpart C), 2 CFR 1200, DOT Order 4200.5 DOT Suspension & Debarment Procedures & Ineligibility.

The Bidder certifies, by submission of this proposal, that neither it nor its principals is presently debarred, suspended, proposed for debarment, declared ineligible, or voluntarily excluded from participation in this transaction by any Federal department or agency. It further agrees by submitting this proposal that it will include this clause without modification in all lower tier transactions, solicitations, proposals, contracts, and subcontracts. Where the Bidder or any lower tier participant is unable to certify to this statement, it shall attach an explanation to this solicitation/proposal.

e. **Buy American Certification:** (49 U.S.C. 50101)
As a condition of bid responsiveness, the bidder must show how it intends to comply with the Buy American preferences established under Title 49 U.S.C. Section 50101. Bidder must complete the attached Buy American Certification. If the bidder requests a permissible waiver to the Buy America requirements, the Bidder identified as with the successful bid must submit a formal waiver request and component cost calculation within the prescribed time identified on the Buy America certification.

ATTACHMENTS TO THIS BID

The following documents are attached to and made a part of this Bid:

1. Bid Guaranty in the form of Bid Bond;

2. Completed "Buy American Certification"

3. Completed DBE forms "Utilization Statement" and "Letter of Intent".

4. Evidence of good faith efforts required by 49 CFR Part 26, Appendix A. If proposed DBE goal is met, submittal of evidence of good faith efforts is not required.

5. Evidence of Bidder's qualifications per the requirements of the Instructions-to-Bidders.

SIGNATURE OF BIDDER

IF AN INDIVIDUAL:

Name: _____

By: _____
(Signature of Individual)

Doing Business as: _____

Business Address: _____

_____

Telephone Number: _____

IF A PARTNERSHIP:

Partnership Name: _____

By: _____
(Authorized Signature)
(Attach Evidence of Authority to sign as a Partnership)

Name and Title: _____

Business Address: _____

_____

Telephone Number: _____

IF A CORPORATION:

Corporation Name: M-B Companies, Inc.

By: Steve Karlin
(Authorized Signature)
(Attach Evidence of Authority to sign)

Name and Title: Steve Karlin, Senior Vice President

Business Address: 1615 Wisconsin Avenue
New Holstein, WI 53061

Telephone Number: 920-898-1080

ATTEST:

By: Susan A. Tornison
(Authorized Signature)

Name and Title: Susan A. Tornison, Vice Pres.

IF A JOINT VENTURE: (Attach copy of Joint Venture Agreement)

Joint Venture Name: _____

By: _____
(Authorized Signature)
(Attach Evidence of Authority to sign)

Name and Title: _____

Business Address: _____

_____

Telephone Number: _____

Joint Venture Name: _____

By: _____
(Authorized Signature)
(Attach Evidence of Authority to sign)

Name and Title: _____

Business Address: _____

_____

Telephone Number: _____

Corporate Resolution

Resolved, that the following officer of M-B COMPANIES, INC. a/k/a M-B COMPANIES, INC. OF WISCONSIN a/k/a M-B COMPANY, INC. OF WISCONSIN a/k/a M-B COMPANY, INC., a Wisconsin corporation, to-wit: Steven Karlin, Assistant-Secretary, is hereby authorized for and on behalf of and in the name of said corporation to execute Invitation for Bids and contracts on behalf of the M-B Companies, Inc.

I, Susan A. Torrison, do hereby certify that I am the duly elected and qualified Vice-President/Treasurer of said corporation and custodian of the records of M-B COMPANIES, INC. a/k/a M-B COMPANIES, INC. OF WISCONSIN, a/k/a M-B COMPANY, INC. OF WISCONSIN, a/k/a M-B COMPANY, INC., a Wisconsin corporation, organized and existing under and by virtue of the laws of the State of Wisconsin; that the foregoing is a true and correct copy of a certain resolution duly adopted in accordance with the law and the By-Laws of said corporation.

IN WITNESS WHEREOF, I have affixed by name as Vice-President/Treasurer of the corporation.

1/7/2014
Date

Susan A. Torrison, Vice President/Treasurer

I, Susan A. Torrison, Vice-President/Treasurer of said corporation, do hereby certify that the foregoing is a true copy of the resolution passed as above set forth.

1/7/2014
Date

Susan A. Torrison, Vice President/Treasurer

Corporate Resolution

Resolved, that the following officer of M-B COMPANIES, INC. a/k/a/ M-B COMPANIES, INC. OF WISCONSIN a/k/a M-B COMPANY, INC. OF WISCONSIN a/k/a M-B COMPANY, INC., a Wisconsin corporation, to-wit: Susan A. Torrison, Vice-President, is hereby authorized for and on behalf of and in the name of said corporation to execute documents on behalf of the M-B Companies, Inc.

I, Terrence J. Cosgrove, do hereby certify that I am the duly elected and qualified president of said corporation and custodian of the records of M-B COMPANIES, INC. a/k/a M-B COMPANIES, INC. OF WISCONSIN, a/k/a M-B COMPANY, INC. OF WISCONSIN, a/k/a M-B COMPANY, INC., a Wisconsin corporation, organized and existing under and by virtue of the laws of the State of Wisconsin; that the foregoing is a true and correct copy of a certain resolution duly adopted in accordance with the law and the By-Laws of said corporation.

IN WITNESS WHEREOF, I have affixed by name as president of the corporation.

3/7/2011
Date

Terrence J. Cosgrove, President

I, Terrence J. Cosgrove, President of said corporation, do hereby certify that the foregoing is a true copy of the resolution passed as above set forth.

3/7/2011
Date

Terrence J. Cosgrove, President

Buy America Certification
(Title 49 U.S.C. Section 50101)

PROJECT NAME:	Procure Snow Removal Equipment
AIRPORT NAME:	Hays Regional Airport
AIP NUMBER:	3-20-0028-33

This solicitation and any resulting contract are subject to the Buy America requirements of 49 U.S.C. Section 50101. The bidder certifies it and all associated subcontractors will comply with the Buy American preferences established under Title 49 U.S.C. Section 50101 as follows:

U.S.C. Section 50101 - Buying goods produced in the United States

(a) Preference. - The Secretary of Transportation may obligate an amount that may be appropriated to carry out section 106(k), 44502(a)(2), or 44509, subchapter I of chapter 471 (except section 47127), or chapter 481 (except sections 48102(e), 48106, 48107, and 48110) of this title for a project only if steel and manufactured goods used in the project are produced in the United States.

(b) Waiver. - The Secretary may waive subsection (a) of this section if the Secretary finds that –
   (1) Applying subsection (a) would be inconsistent with the public interest;
   (2) The steel and goods produced in the United States are not produced in a sufficient and reasonably available amount or are not of a satisfactory quality;
   (3) When procuring a facility or equipment under section 44502(a)(2) or 44509, subchapter I of chapter 471 (except section 47127), or chapter 481 (except sections 48102(e), 48106, 48107, and 48110) of this title -
      (A) The cost of components and subcomponents produced in the United States is more than 60 percent of the cost of all components of the facility or equipment; and
      (B) Final assembly of the facility or equipment has occurred in the United States; or
   (4) Including domestic material will increase the cost of the overall project by more than 25 percent.

(c) Labor Costs. - In this section, labor costs involved in final assembly are not included in calculating the cost of components.

* * * * *

Certificate of Buy American Compliance for Manufactured Products

(Non-building construction projects, equipment acquisition projects)

As a matter of bid responsiveness, the bidder or offeror must complete, sign, date, and submit this certification statement with their proposal. The bidder or offeror must indicate how they intend to comply with 49 USC § 50101 by selecting one on the following certification statements. These statements are mutually exclusive. Bidder must select one or the other (not both) by inserting a checkmark (✓) or the letter "X".

☐ Bidder or offeror hereby certifies that it will comply with 49 USC § 50101 by:

a) Only installing steel and manufactured products produced in the United States, or;
b) Installing manufactured products for which the FAA has issued a waiver as indicated by inclusion on the current FAA Nationwide Buy American Waivers Issued listing, or;
c) Installing products listed as an Excepted Article, Material or Supply in Federal Acquisition Regulation Subpart 25.108.

By selecting this certification statement, the bidder or offeror agrees:

1. To provide to the Owner evidence that documents the source and origin of the steel and manufactured product.
2. To faithfully comply with providing US domestic product
3. To furnish US domestic product for any waiver request that the FAA rejects

4. To refrain from seeking a waiver request after establishment of the contract, unless extenuating circumstances emerge that the FAA determines justified.

☒ The bidder or offeror hereby certifies it cannot comply with the 100% Buy American Preferences of 49 USC § 50101(a) but may qualify for either a Type 3 or Type 4 waiver under 49 USC § 50101(b). By selecting this certification statement, the apparent bidder or offeror with the apparent low bid agrees:

1. To the submit to the Owner within 15 calendar days of the bid opening, a formal waiver request and required documentation that support the type of waiver being requested.
2. That failure to submit the required documentation within the specified timeframe is cause for a non-responsive determination may result in rejection of the proposal.
3. To faithfully comply with providing US domestic products at or above the approved US domestic content percentage as approved by the FAA.
4. To refrain from seeking a waiver request after establishment of the contract, unless extenuating circumstances emerge that the FAA determines justified.

Required Documentation

Type 3 Waiver - The cost of the item components and subcomponents produced in the United States is more that 60% of the cost of all components and subcomponents of the "item". The required documentation for a type 3 waiver is:

a) Listing of all product components and subcomponents that are not comprised of 100% US domestic content (Excludes products listed on the FAA Nationwide Buy American Waivers Issued listing and products excluded by Federal Acquisition Regulation Subpart 25.108; products of unknown origin must be considered as non-domestic products in their entirety)
b) Cost of non-domestic components and subcomponents, excluding labor costs associated with final assembly at place of manufacture.
c) Percentage of non-domestic component and subcomponent cost as compared to total "item" component and subcomponent costs, excluding labor costs associated with final assembly at place of manufacture.

Type 4 Waiver – Total cost of project using US domestic source product exceeds the total project cost using non-domestic product by 25%. The required documentation for a type 4 of waiver is:

a) Detailed cost information for total project using US domestic product
b) Detailed cost information for total project using non-domestic product

False Statements: Per 49 USC § 47126, this certification concerns a matter within the jurisdiction of the Federal Aviation Administration and the making of a false, fictitious or fraudulent certification may render the maker subject to prosecution under Title 18, United States Code.

2/26/16
Date

Signature

M-B Companies, INC.
Company Name

Senior Vice President
Title

Instructions for Section 50101(b)(3) Waiver:

1. "Equipment" in Section 50101 shall mean the following:
   a) Individual type "L" items (Airfield Lighting Equipment) as listed in FAA Advisory Circular 150/5345-53.
   b) Individual bid items as established within FAA Advisory Circular 150/5370-10. The bid item application may not be applied for the type "L" items listed in AC 150/5345-53.
   c) A waiver request may only address one specific equipment item. Submit separate requests for each equipment item for which a waiver.
   d) Items listed under the Nationwide Waiver do not require further review. Please refer to the following webpage: http://www.faa.gov/airports/aip/procurement/federal_contract_provisions/media/buy_american_waiver.xls
2. The Bidder must base the U.S. percentage upon the value that results from completing a component cost calculation table similar to the attached format. Bidder shall avoid mere pro forma efforts to establish the waiver request percentage. The Bidder must submit the component cost calculation table as an attachment to the waiver request.
3. Components/subcomponents are the material and products composing the "equipment".
4. The final assembly of the AIP-funded "equipment" must be within the USA (Section 50101(b)(3)(B)). Final assembly is the substantial transformation of the components and subcomponents into the end product.
5. All steel used in the "Equipment" must be produced in the United States.
6. The Buy American requirements apply to all tier Contractors and subcontractors. All Contractors/subcontractors are required to provide appropriate documentation that indicates origin of manufacturer and percentage of domestic made product.
7. The Bidder is hereby advised there is no implied or expressed guarantee that a requested waiver will be issued by the Federal Aviation Administration (FAA). Less than 60% USA component/subcomponent proposed for this facility CANNOT be waived. Products made with foreign steel are not eligible for a waiver.

Instructions for Section 50101(b)(4) Waiver:

1. The 25% cost increase waiver is rarely applicable. Consult Owner before making this request.

North America Free Trade Act (NAFTA)

The NAFTA **does not** apply to the AIP. Products and material made in Canada or Mexico must be considered as foreign made products.

COMPONENT COST CALCULATION TABLE

- In lieu of completing this table, bidder may prepare a spreadsheet that addresses the same information and calculations as presented herein.
- An authorized person shall attest under signature and date that the submitted information is accurate and complete.
- The Bidder/Contractor shall submit the signed component cost calculation table to the Owner as an attachment to the waiver request
- The component breakout shall be along major components of the equipment.
- Submit separate calculation for each different equipment types. Do not combine the component cost calculations of different types of equipment.
- For Airfield development projects, equipment is defined as the "L" items (Airfield Lighting Equipment) as listed in FAA Advisory Circular 150/5345-53 and the b) individual bid items as established within FAA Advisory Circular 150/5370-10. The individual bid item method may not be applied to the "L" type items.

Equipment Type: Snow Removal

Component/ Subcomponents	Name of Manufacturer	Country of Origin	Cost of Foreign Manufactured Components/ Subcomponents	Cost of USA Manufactured Components/ Subcomponents
(See Attached)				

Sum of US Manufactured Component/Subcomponent Costs: (See Attached)

Sum of all Equipment Components and Subcomponents: (See Attached)

Percentage of Equipment Components Manufactured in the United States: (See Attached)

Place of Final Assembly: Chilton, WI

Certification Signature

I hereby certify the above information is accurate and complete.

M-B Companies, Inc. 2/26/16

Bidder's Firm Name Date

Steve Kaplin

Signature

Buy America Waiver Request

Title 49 U.S.C Section 50101 (b)

For Equipment and Vehicles (ARFF and SRE) Procured under the Airport Improvement Program

Type of Waiver Request:

The bidder may request a waiver subject to the provisions of Section 50101 (b)(1), Section 50101 (b)(2), Section 50101(b)(3) or Section 50101(b)(4). The Owner's approval ~~with~~ of the bidders request is contingent upon Federal Aviation Administration (FAA) approval with the waiver request. The bidder must select one of the following applicable waiver provisions:

- ☐ Section 50101(b)(1): Bidder hereby requests a waiver to Buy America preferences based upon Section 50101(b)(1). Applying subsection 50101 (a) *Preference*, would be inconsistent with the public interest. (See approval level below).

- ☐ Section 50101(b)(2): Bidder hereby requests a waiver to Buy America preferences based upon Section 50101(b)(2). The steel and goods produced in the United States are not produced in a sufficient and reasonably available amount or are not of a satisfactory quality. (See approval level below).

- ☒ Section 50101(b)(3): Bidder hereby requests a waiver to Buy America preferences based upon Section 50101(b)(3). The bidder further certifies 83.5 % of the cost of components and subcomponents comprising the facility are produced in the United States and that final assembly occurs with the United States. *(Bidder must attach a copy of the component cost calculation table).*

- ☐ Section 50101(b)(4). Bidder hereby requests a waiver to Buy America preferences based upon Section 50101(b)(4). The bidder asserts provision of domestic material increases the cost of the overall project by more than 25%.

Certification Signature

In accordance with Section 50101(b), we request a waiver to the Buy America provisions based on the above certification and attached documentation.

M-B Companies, Inc.
Bidder's Firm Name

2/26/16
Date

Steve Karlin
Signature

Approval level for Waivers:

Please note that approval of waivers listed under (b)(1) & (2), can only be approved by the FAA Office of Airports in Washington DC and approval is rare. Waivers listed under (b) (3) & (4) may be approved by FAA Regional or District Offices.

Instructions for Section 50101(b)(3) Waiver:

1. "Equipment" in Section 50101 shall mean AIP-funded vehicle or single piece of equipment.
2. The bidder must base the U.S. percentage upon the value that results from completing a component cost calculation table similar to the attached format. Bidder shall avoid mere pro forma efforts to establish the waiver request percentage. The Bidder must submit the component cost calculation table as an attachment to the waiver request. The component breakout shall be along major elements/systems of the equipment.
3. Components are the material and products directly incorporated into the "vehicle" at the place of final assembly.
4. The final assembly of the AIP-funded "equipment" must be within the USA *(Section 50101(b)(3)(B))*. Final assembly is the substantial transformation of the components and subcomponents into the end product.
5. All steel used in the "Equipment" must be produced in the USA. FAA will not approve a waiver for products made with non-domestic steel.
6. The Buy American requirements apply to all tier contractors and subcontractors. All contractors/subcontractors are required to provide sufficient documentation that indicates origin of manufacturer and percentage of domestic manufactured product.
7. The bidder is hereby advised there is no implied or expressed guarantee that the Federal Aviation Administration (FAA) will approve any requested waiver. The FAA CANNOT concur with any waiver request for less than 60% US component participation.

Instructions for Section 50101(b)(4) Waiver:

1. This waiver is rarely applied. Consult Owner before making this request.
2. Prepare detailed proposal costs using domestic product(s) and the overall project cost. Prepare detailed alternate proposal costs of the non-domestic product(s) and the overall project cost. If the proposal with domestic product(s) is more than 25% of the proposal with non-domestic product(s), the bidder may request a waiver under 50101(b)(4).
3. Bidder must attach adequate documentation that supports the use of domestic products results in an increase in the overall project costs that exceeds 25%. The bidder must certify under signature and date that the submittal information is correct and accurate.

North America Free Trade Act (NAFTA)

The NAFTA **does not** apply to the AIP. Products and material made in Canada or Mexico must be considered as foreign made products.

COMPONENT COST CALCULATION TABLE

- *In lieu of completing this table, bidder may prepare a spreadsheet that addresses the same information and calculations as presented herein.*
- *An authorized person shall attest under signature and date that the submitted information is accurate and complete*
- *The bidder/contractor shall submit the signed component cost calculation table to the Owner as an attachment to the waiver request*
- *The component breakout shall be along major elements of the equipment. Inadequate breakout of components is cause for owner rejection of the waiver request*

Component/Subcomponents	Name of Manufacturer	Country of Origin	Cost of Foreign Manufactured Components/Subcomponents	Cost of USA Manufactured Components/Subcomponents
(See Attached				

Sum of US Manufactured Component/Subcomponent Costs: _____

Sum of all Equipment Components and Subcomponents: _____

Percentage of Equipment Components Manufactured in the United States: _____

Place of Final Assembly: _____

Certification Signature

I hereby certify the above information is accurate and complete.

M-B Companies, Inc. 2/26/16

Bidder's Firm Name *Date*

Steve Karlin

Signature

M-B Companies, Inc.
TOWGA
Porcure Snow Removal Equipment
Prepared for Hays Regional Airport, City of Hays, Kansas
AIP No. 3-20-0028-33

Buy American

Country	TOWGA	Quantity	Manufacturer	Sell Price Each	
US & others	Cat C9 engine	1	Caterpillar	$	14,690.07
Czech Republic	Broom caster tires	2	Continental	$	1,053.06
Sweden	Air blower motors	1	SunFab	$	1,816.81
Indeterminable	Electrical controllers, lights, modules	1	Indeterminable	$	1,648.53
Indeterminable	Electrical Harnesses	1	Indeterminable	$	1,248.97
Indeterminable	Nuts, bolts, fittings	1	Indeterminable	$	552.44
			Non-USA sell price	$	21,009.88

Sell price less final assembly, warranty, freight, training	Each	$	127,570.76
Non-USA components	Each	$	21,009.88
USA components	Each	$	106,560.88
Percent USA components			83.5%

Final Assembly takes place in Chilton, Wisconsin

M-B Companies, Inc. 2/25/16

Steve Karlin
Senior Vice President

FAA
Office of Airports Planning and Programming

Job # AIP No. 3-20-0028-33
Airport Sponsor: Hays Regional Airport, City of Hays, Kansas

Buy American Preferences - Final Assembly Questionnaire

To assist the Federal Aviation Administration (FAA) in making the determination of whether final assembly of the product occurs in the United States, please complete and submit this questionnaire when requesting a Buy American Waiver under 49 U.S.C. 50101(b)(3)(A).

1. Please provide a description of the assembly process occurring at the specified final location in the United States?

Please describe the final assembly process and its various operations?
M-B Companies manufactures most of the components used on the proposed product in Chilton, Wisconsin. These components, plus those purchased are brought to the Chilton final assembly area where they are painted as needed, and assembled into the final product. Final assembly includes building the frame assembly, building and installing the engine enclosure, the broom assembly, hydraulic system, electrical system including lighting, etc.

How long does the final assembly process take to complete?
Because this information is confidential, we will state that it takes over 200 man-hours for final assembly.

2. Please provide a description of the resources used to conduct the assembly of the product at the specified location in the United States?

How many employees are involved in the final assembly process and what is the general skill level of those employees?
The number of employees in the final assembly process is based on how many units we are assembling at a given time. The work is divided among the painters, cab assemblers, electrical workers, and final assemblers. Approximately 7-9 employees work on any given unit during assembly.

What type of equipment is used during the final assembly process?
Painting equipment, power and hand tools, hoists and cranes.

What is a rough estimate of the associated cost to conduct final assembly of the product at the specified location in the United States?
Final assembly labor costs represent between 10% and 15% of the total bid price.

UTILIZATION STATEMENT

Disadvantage Business Enterprise

The undersigned Bidder/offeror has satisfied the requirements of the bid specification in the following manner. (*Please mark the appropriate box*)

☒ **The Bidder/offeror is committed to a minimum of 0.0% DBE utilization on this contract.**

☐ **The Bidder/offeror, while unable to meet the DBE goal of _____%, hereby commits to a minimum of _____% DBE utilization on this contract and also submits documentation, as an attachment demonstrating good faith efforts (GFE).**

The undersigned hereby further assures that the information included herein is true and correct, and that the DBE firm(s) listed herein have agreed to perform a commercially useful function in the work items noted for each firm. The undersigned further understands that no changes to this statement may be made without prior approval from the Civil Right Staff of the Federal Aviation Administration.

M-B Companies, Inc.
Bidder's Firm Name

Steve Kadin 2/26/16
Signature Date

DBE UTILIZATION SUMMARY

	Contract Amount		DBE Amount	Contract Percentage
DBE Prime Contractor	$_____	x 1.00 =	$_____	_____%
DBE Subcontractor	$_____	x 1.00 =	$_____	_____%
DBE Supplier	$_____	x 0.60 =	$_____	_____%
DBE Manufacturer	$_____	x 1.00 =	$_____	_____%
Total Amount DBE			$_____	_____%
DBE Goal			$_____	_____%

Note: If the total proposed DBE participation is less than the established DBE goal, Bidder must provide written documentation of the good faith efforts as required by 49 CFR Part 26.

M-B Companies, Inc.

Corporate Office
1615 Wisconsin Avenue
P.O. Box 200
New Holstein, WI 53061
800.558.5800

Airport Maintenance Products
1200 Park Street
Chilton, WI 53014
800.558.5800

Attachments
1615 Wisconsin Avenue
New Holstein, WI 53061
800.558.5800

Multi-Service Vehicle
1615 Wisconsin Avenue
New Holstein, WI 53061
800.558.5800

Pavement Marking-East
79 Montgomery Street
Montgomery, PA 17752
888.323.2900

Pavement Marking-West
2490 Ewald Avenue SE
Salem, OR 97302
800.253.2909

Replacement Brushes
1217 E Chestnut Street
Chilton, WI 53014
800.558.5800

Hays Regional Airport, City of Hays, Kansas
AIP No. 3-20-0028-33, Procure Snow Removal Equipment
Bid Opening Date: March 01, 2016, 3:00PM

M-B Companies, Inc. DBE Participation Plan

The M-B Companies has over the past several years sent out solicitations to our supply base inquiring and encouraging our suppliers to participate in the Disadvantaged Business Enterprise (DBE) program.

87 M-B suppliers have been contacted through email and follow up phone calls. Evidence of this is detailed on our attached Good Faith Effort listing.

The solicitation directs the suppliers to the following websites:

Out of state suppliers are directed to: http://www.dot.gov/osdbu/disadvantaged-business-enterprise/state-dot-and-dbe-program-websites,

Wisconsin Suppliers are directed to:
http://www.dot.wisconsin.gov/business/engrserv/dbe-firms.htm.

As of this date, we have not found a certified DBE supplier for equipment in this bid.

M-B continues to search for certified DBE's for future opportunities.

LETTER OF INTENT

Disadvantage Business Enterprise
(This page shall be submitted for each DBE firm)

Bidder/Offer

Name: M-B Companies, Inc.
Address: 1200 Park Street
City: Chilton State: WI Zip: 53014

DBE Firm:

DBE Firm: NONE/NA
Address:
City: State: Zip:

DBE Contact Person:

Name: Phone: ( )

DBE Certifying Agency:

Expiration Date:

Each DBE Firm shall submit evidence (such as a photocopy) of their certification status.

Classification:

☐ Prime Contractor ☐ Subcontractor ☐ Joint Venture

☐ Manufacturer ☐ Supplier

Work item(s) to be performed by DBE	Description of Work Item	Quantity	Total
	N/A		

The Bidder/offeror is committed to utilizing the above-named DBE firm for the work described above. The estimated participation is as follows:

DBE contract amount:$ zero Percent of total contract: zero %

AFFIRMATION:
The above-named DBE firm affirms that it will perform the portion of the contract for the estimated dollar value as stated above.

By: Steve Kaulin Senior Vice President
(Signature) *(Title)*

Note: In the event the Bidder/offeror does not receive award of the prime contract, any and all representations in this Letter of Intent and Affirmation shall be null and void.

BID BOND

AIP NO. 3-20-0028-33

KNOW ALL MEN BY THESE PRESENTS, That we, M-B Companies, Inc., 1615 Wisconsin Ave., New Holstein, WI 53061

Hereinafter call the Principal, and Travelers Casualty and Surety Company of America

of One Tower Square, Hartford, CT

a Corporation duly organized and existing under the laws of the State of CT and authorized to do business in the State of Kansas, hereinafter called the Surety, as Surety, are held and firmly bound unto, the City of Hays, Kansas, hereinafter called the Obligee, in the sum of
5% of attached bid

Dollars ($----------),
good and lawful money of the United States of America, to be paid upon demand of the Obligee, for payment of which sum well and truly to be made, we bind ourselves, our heirs, executors, administrators, successors and assigns, jointly and severally, firmly by these presents.

THE CONDITION OF THE FOREGOING OBLIGATION IS SUCH THAT, Whereas, the Principal has submitted to the Obligee a Bid for furnishing all labor, materials, equipment and incidentals thereto necessary for Work generally described as *Procure Snow Removal Equipment at Hays Regional Airport, Hays, Kansas.*

NOW, THEREFORE, If the Obligee shall accept the bid of the Principal and the Principal shall enter into a written agreement with the Obligee in accordance with the terms conditions and price(s) set forth therein, and furnish such insurance and give such bond or bonds as may be specified in the Bidding or Contract Documents with good and sufficient surety for the faithful performance of such Agreement and for the prompt payment of labor and materials furnished in the prosecution thereof, then this obligation shall become null and void; otherwise, it shall remain in full force and effect; and the Surety shall, upon failure of the Principal to comply with any or all of the foregoing requirements immediately pay to the Obligee, upon demand, the amount hereof in good and lawful money of the United States of America, not as a penalty, but as liquidated damages.

IN TESTIMONY WHEREOF, the principal and Surety have caused these presents to be duly signed and sealed this 25th day of February, 2016, ~~2015~~.

M-B Companies, Inc.
Principal

By [signature] (SEAL)
Vice President
Official Title

Travelers Casualty and Surety Company of America
Surety Company

By [signature]
Attorney-in-Fact

By N/A
Kansas Agent

(Accompany this bond with Attorney-in-Fact's authority from the Surety Company certified to include the date of the bond.)

TRAVELERS

POWER OF ATTORNEY

Farmington Casualty Company
Fidelity and Guaranty Insurance Company
Fidelity and Guaranty Insurance Underwriters, Inc.
St. Paul Fire and Marine Insurance Company
St. Paul Guardian Insurance Company

St. Paul Mercury Insurance Company
Travelers Casualty and Surety Company
Travelers Casualty and Surety Company of America
United States Fidelity and Guaranty Company

Attorney-In Fact No. 230355

Certificate No. 006590641

KNOW ALL MEN BY THESE PRESENTS: That Farmington Casualty Company, St. Paul Fire and Marine Insurance Company, St. Paul Guardian Insurance Company, St. Paul Mercury Insurance Company, Travelers Casualty and Surety Company, Travelers Casualty and Surety Company of America, and United States Fidelity and Guaranty Company are corporations duly organized under the laws of the State of Connecticut, that Fidelity and Guaranty Insurance Company is a corporation duly organized under the laws of the State of Iowa, and that Fidelity and Guaranty Insurance Underwriters, Inc., is a corporation duly organized under the laws of the State of Wisconsin (herein collectively called the "Companies"), and that the Companies do hereby make, constitute and appoint

Carol F. Tasciotti, Evonne Brown, Adele M. Korczak, Grace Villarreal, Gail Schroeder, Gina M. Damato, Thomas A. Pictor, Michael Damewood, Luisa Seymour, Thomas N. Tague, Brenda D. Hockberger, Carlina A. Oswald, Tara S. Petersen, Todd D. Baraniak, Dale F. Poquette, Oscar F. Rincon, Moises Alcantar, James P. Fagan, Stephanie Miller, Grace Fowlkes, Ann Mulder, Launa Reidenbach, William Matthews, Mary D. Thomas, Amber Derkson, Dan Hasson, Dan Orna, Kristan Retusnic, Kathleen Stewart, Mary Jo Campbell, Carrie Smith, Adam Kveton, Jessica Hernandez, Robin Vinci, Jason Cummings, Emily Swatkowski, Renee D. Davis, and Tiffany Uribe

of the City of Chicago/Naperville, State of Illinois, their true and lawful Attorney(s)-in-Fact, each in their separate capacity if more than one is named above, to sign, execute, seal and acknowledge any and all bonds, recognizances, conditional undertakings and other writings obligatory in the nature thereof on behalf of the Companies in their business of guaranteeing the fidelity of persons, guaranteeing the performance of contracts and executing or guaranteeing bonds and undertakings required or permitted in any actions or proceedings allowed by law.

IN WITNESS WHEREOF, the Companies have caused this instrument to be signed and their corporate seals to be hereto affixed, this 13th day of January, 2016.

Farmington Casualty Company
Fidelity and Guaranty Insurance Company
Fidelity and Guaranty Insurance Underwriters, Inc.
St. Paul Fire and Marine Insurance Company
St. Paul Guardian Insurance Company

St. Paul Mercury Insurance Company
Travelers Casualty and Surety Company
Travelers Casualty and Surety Company of America
United States Fidelity and Guaranty Company

State of Connecticut
City of Hartford ss.

By: _____
Robert L. Raney, Senior Vice President

On this the 13th day of January, 2016, before me personally appeared Robert L. Raney, who acknowledged himself to be the Senior Vice President of Farmington Casualty Company, Fidelity and Guaranty Insurance Company, Fidelity and Guaranty Insurance Underwriters, Inc., St. Paul Fire and Marine Insurance Company, St. Paul Guardian Insurance Company, St. Paul Mercury Insurance Company, Travelers Casualty and Surety Company, Travelers Casualty and Surety Company of America, and United States Fidelity and Guaranty Company, and that he, as such, being authorized so to do, executed the foregoing instrument for the purposes therein contained by signing on behalf of the corporations by himself as a duly authorized officer.

In Witness Whereof, I hereunto set my hand and official seal.
My Commission expires the 30th day of June, 2016.

MARIE C. TETREAULT NOTARY PUBLIC CONNECTICUT

Marie C. Tetreault
Marie C. Tetreault, Notary Public

58440-8-12 Printed in U.S.A.

This Power of Attorney is granted under and by the authority of the following resolutions adopted by the Boards of Directors of Farmington Casualty Company, Fidelity and Guaranty Insurance Company, Fidelity and Guaranty Insurance Underwriters, Inc., St. Paul Fire and Marine Insurance Company, St. Paul Guardian Insurance Company, St. Paul Mercury Insurance Company, Travelers Casualty and Surety Company, Travelers Casualty and Surety Company of America, and United States Fidelity and Guaranty Company, which resolutions are now in full force and effect, reading as follows:

RESOLVED, that the Chairman, the President, any Vice Chairman, any Executive Vice President, any Senior Vice President, any Vice President, any Second Vice President, the Treasurer, any Assistant Treasurer, the Corporate Secretary or any Assistant Secretary may appoint Attorneys-in-Fact and Agents to act for and on behalf of the Company and may give such appointee such authority as his or her certificate of authority may prescribe to sign with the Company's name and seal with the Company's seal bonds, recognizances, contracts of indemnity, and other writings obligatory in the nature of a bond, recognizance, or conditional undertaking, and any of said officers or the Board of Directors at any time may remove any such appointee and revoke the power given him or her; and it is

FURTHER RESOLVED, that the Chairman, the President, any Vice Chairman, any Executive Vice President, any Senior Vice President or any Vice President may delegate all or any part of the foregoing authority to one or more officers or employees of this Company, provided that each such delegation is in writing and a copy thereof is filed in the office of the Secretary; and it is

FURTHER RESOLVED, that any bond, recognizance, contract of indemnity, or writing obligatory in the nature of a bond, recognizance, or conditional undertaking shall be valid and binding upon the Company when (a) signed by the President, any Vice Chairman, any Executive Vice President, any Senior Vice President or any Vice President, any Second Vice President, the Treasurer, any Assistant Treasurer, the Corporate Secretary or any Assistant Secretary and duly attested and sealed with the Company's seal by a Secretary or Assistant Secretary; or (b) duly executed (under seal, if required) by one or more Attorneys-in-Fact and Agents pursuant to the power prescribed in his or her certificate or their certificates of authority or by one or more Company officers pursuant to a written delegation of authority; and it is

FURTHER RESOLVED, that the signature of each of the following officers: President, any Executive Vice President, any Senior Vice President, any Vice President, any Assistant Vice President, any Secretary, any Assistant Secretary, and the seal of the Company may be affixed by facsimile to any Power of Attorney or to any certificate relating thereto appointing Resident Vice Presidents, Resident Assistant Secretaries or Attorneys-in-Fact for purposes only of executing and attesting bonds and undertakings and other writings obligatory in the nature thereof, and any such Power of Attorney or certificate bearing such facsimile signature or facsimile seal shall be valid and binding upon the Company and any such power so executed and certified by such facsimile signature and facsimile seal shall be valid and binding on the Company in the future with respect to any bond or understanding to which it is attached.

I, Kevin E. Hughes, the undersigned, Assistant Secretary, of Farmington Casualty Company, Fidelity and Guaranty Insurance Company, Fidelity and Guaranty Insurance Underwriters, Inc., St. Paul Fire and Marine Insurance Company, St. Paul Guardian Insurance Company, St. Paul Mercury Insurance Company, Travelers Casualty and Surety Company, Travelers Casualty and Surety Company of America, and United States Fidelity and Guaranty Company do hereby certify that the above and foregoing is a true and correct copy of the Power of Attorney executed by said Companies, which is in full force and effect and has not been revoked.

IN TESTIMONY WHEREOF, I have hereunto set my hand and affixed the seals of said Companies this 25th day of February, 20 16

Kevin E. Hughes, Assistant Secretary

To verify the authenticity of this Power of Attorney, call 1-800-421-3880 or contact us at www.travelersbond.com. Please refer to the Attorney-In-Fact number, the above-named individuals and the details of the bond to which the power is attached.

OMB Number: 4040-0004
Expiration Date: 08/31/2016

Application for Federal Assistance SF-424

* 1. Type of Submission	* 2. Type of Application	* If Revision, select appropriate letter(s):
☐ Preapplication	☒ New	- Select One -
☒ Application	☐ Continuation	* Other (Specify)
☐ Changed/Corrected Application	☐ Revision	

* 3. Date Received:

4. Application Identifier: HYS

5a. Federal Entity Identifier: 3-20-0028-33

* 5b. Federal Award Identifier:

State Use Only:

6. Date Received by State:

7. State Application Identifier:

8. APPLICANT INFORMATION:

* a. Legal Name: City of Hays, Kansas

* b. Employer/Taxpayer Identification Number (EIN/TIN): 48-6011465

*c. Organizational DUNS: 039 929 120

d. Address:

* Street1: City Hall
Street 2: 1507 Main Street P.O. Box 490
* City: Hays
County: Ellis
* State: Kansas
Province:
Country: USA

*Zip/ Postal Code: 67601

e. Organizational Unit:

Department Name: Airport

Division Name:

f. Name and contact information of person to be contacted on matters involving this application:

Prefix: Mr.
First Name: Greg
Middle Name:
* Last Name: Sund
Suffix:

Title: Director of Public Works

Organizational Affiliation:

* Telephone Number: (785) 628-7350

Fax Number: (785) 628-7352

* Email: gsund@haysusa.com

Application for Federal Assistance SF-424

*9. Type of Applicant 1: Select Applicant Type:

C. City or Township Government

Type of Applicant 2: Select Applicant Type:

- Select One -

Type of Applicant 3: Select Applicant Type:

- Select One -

* Other (specify):

* 10. Name of Federal Agency:

Federal Aviation Administration (FAA)

11. Catalog of Federal Domestic Assistance Number:

20.106

CFDA Title:

Airport Improvement Program

*12. Funding Opportunity Number:

Title:

13. Competition Identification Number:

Title:

14. Areas Affected by Project (Cities, Counties, States, etc.):

City of Hays, Kansas at the Hays Regional Airport

* 15. Descriptive Title of Applicant's Project:

Procure Snow Removal Equipment. Hays Regional Airport has approximately 894,600 square feet of critical snow removal area. This includes the primary runway, parallel taxiway, general aviation apron, and fire rescue/emergency routes. The Airport is required to remove snowfall from these primary areas within 1 hour for aircraft operations. According to the FAA Snow Removal Equipment worksheet, the Airport is required to have this equipment. The procurement of a new 12-foot runway broom will bring the Airport into compliance with this requirement and make the facilities safer for all users during snowfall events.

Attach supporting documents as specified in agency instructions.

Application for Federal Assistance SF-424

16. Congressional Districts Of:

*a. Applicant: KS-001 *b. Program/Project: KS-001

Attach an additional list of Program/Project Congressional Districts if needed.

17. Proposed Project:

*a. Start Date: 01/11/2016 *b. End Date: 01/31/2016

18. Estimated Funding ($):

*a. Federal	156,018.00
*b. Applicant	17,336.00
*c. State	
*d. Local	
*e. Other	
*f. Program Income	
*g. TOTAL	173,354.00

***19. Is Application Subject to Review By State Under Executive Order 12372 Process?**

☐ a. This application was made available to the State under the Executive Order 12372 Process for review on _____

☐ b. Program is subject to E.O. 12372 but has not been selected by the State for review.

☒ c. Program is not covered by E.O. 12372

***20. Is the Applicant Delinquent On Any Federal Debt? (If "Yes", provide explanation on next page.)**

☐ Yes ☒ No

21. *By signing this application, I certify (1) to the statements contained in the list of certifications** and (2) that the statements herein are true, complete and accurate to the best of my knowledge. I also provide the required assurances** and agree to comply with any resulting terms if I accept an award. I am aware that any false, fictitious, or fraudulent statements or claims may subject me to criminal, civil, or administrative penalties. (U.S. Code, Title 218, Section 1001)

☑ ** I AGREE

** The list of certifications and assurances, or an internet site where you may obtain this list, is contained in the announcement or agency specific instructions.

Authorized Representative:

Prefix: Mr. *First Name: Greg

Middle Name:

*Last Name: Sund

Suffix:

*Title: Director of Public Works

*Telephone Number: (785) 628-7350 Fax Number: (785) 628-7352

* Email: gsund@haysusa.com

*Signature of Authorized Representative: *Date Signed:

Application for Federal Assistance SF-424

*Applicant Federal Debt Delinquency Explanation

The following field should contain an explanation if the Applicant organization is delinquent on any Federal Debt. Maximum number of characters that can be entered is 4,000. Try and avoid extra spaces and carriage returns to maximize the availability of space.

Application for Federal Assistance (Development Projects)

PART II – PROJECT APPROVAL INFORMATION

SECTION A	
Item 1. Does this assistance request require State, local, regional, or other priority rating? ☐ Yes ☑ No	Name of Governing Body: Priority:
Item 2. Does this assistance request require State, or local advisory, educational or health clearances? ☐ Yes ☑ No	Name of Agency or Board: (Attach Documentation)
Item 3. Does this assistance request require clearinghouse review in accordance with OMB Circular A-95? ☐ Yes ☑ No	(Attach Comments)
Item 4. Does this assistance request require State, local, regional, or other planning approval? ☐ Yes ☑ No	Name of Approving Agency: Date:
Item 5. Is the proposal project covered by an approved comprehensive plan? ☐ Yes ☑ No	Check one: State ☐ Local ☐ Regional ☐ Location of Plan:
Item 6. Will the assistance requested serve a Federal installation? ☐ Yes ☑ No	Name of Federal Installation: Federal Population benefiting from Project:
Item 7. Will the assistance requested be on Federal land or installation? ☐ Yes ☑ No	Name of Federal Installation: Location of Federal Land: Percent of Project: %
Item 8. Will the assistance requested have an impact or effect on the environment? ☐ Yes ☑ No	(See instructions for additional information to be provided.)
Item 9. Will the assistance requested cause the displacement of individuals, families, businesses, or farms? ☐ Yes ☑ No	Number of: Individuals: Families: Businesses: Farms:
Item 10. Is there other related Federal assistance on this project previous, pending, or anticipated? ☐ Yes ☑ No	(See instructions for additional information to be provided.)

PART II – SECTION C

The Sponsor hereby represents and certifies as follows:

1. Compatible Land Use – The Sponsor has taken the following actions to assure compatible usage of land adjacent to or in the vicinity of the airport:

The snow removal equipment procurement is an AIP eligible project and the equipment will be used within the limits of the Hays Regional Airport.

2. Defaults – The Sponsor is not in default on any obligation to the United States or any agency of the United States Government relative to the development, operation, or maintenance of any airport, except as stated herewith:

None.

3. Possible Disabilities – There are no facts or circumstances (including the existence of effective or proposed leases, use agreements or other legal instruments affecting use of the Airport or the existence of pending litigation or other legal proceedings) which in reasonable probability might make it impossible for the Sponsor to carry out and complete the Project or carry out the provisions of the Grant Assurances, either by limiting its legal or financial ability or otherwise, except as follows:

None.

4. Consistency with Local Plans – The project is reasonably consistent with plans (existing at the time of submission of this application) of public agencies that are authorized by the State in which the project is located to plan for the development of the area surrounding the airport.

Yes.

5. Consideration of Local Interest – It has given fair consideration to the interest of communities in or near where the project may be located.

Yes.

6. Consultation with Users – In making a decision to undertake any airport development project under Title 49, United States Code, it has undertaken reasonable consultations with affected parties using the airport which project is proposed.

Yes.

7. Public Hearings – In projects involving the location of an airport, an airport runway or a major runway extension, it has afforded the opportunity for public hearings for the purpose of considering the economic, social, and environmental effects of the airport or runway location and its consistency with goals and objectives of such planning as has been carried out by the community and it shall, when requested by the Secretary, submit a copy of the transcript of such hearings to the Secretary. Further, for such projects, it has on its management board either voting representation from the communities where the project is located or has advised the communities that they have the right to petition the Secretary concerning a proposed project.

Not required.

8. Air and Water Quality Standards – In projects involving airport location, a major runway extension, or runway location it will provide for the Governor of the state in which the project is located to certify in writing to the Secretary that the project will be located, designed, constructed, and operated so as to comply with applicable and air and water quality standards. In any case where such standards have not been approved and where applicable air and water quality standards have been promulgated by the Administrator of the Environmental Protection Agency, certification shall be obtained from such Administrator. Notice of certification or refusal to certify shall be provided within sixty days after the project application has been received by the Secretary.

Agreed as applicable.

PART II – SECTION C (Continued)

9. **Exclusive Rights** – There is no grant of an exclusive right for the conduct of any aeronautical activity at any airport owned or controlled by the Sponsor except as follows:

None.

10. **Land** – (a) The sponsor holds the following property interest in the following areas of land* which are to be developed or used as part of or in connection with the Airport subject to the following exceptions, encumbrances, and adverse interests, all of which areas are identified on the aforementioned property map designated as Exhibit "A":

The City of Hays maintains property interest for this project as shown on the Exh. A dated 6/6/08, filed under AIP 3-20-0028-15/16.

The Sponsor further certifies that the above is based on a title examination by a qualified attorney or title company and that such attorney or title company has determined that the Sponsor holds the above property interests.

(b) The Sponsor will acquire within a reasonable time, but in any event prior to the start of any construction work under the Project, the following property interest in the following areas of land* on which such construction work is to be performed, all of which areas are identified on the aforementioned property map designated as Exhibit "A":

Not applicable for this project.

(c) The Sponsor will acquire within a reasonable time, and if feasible prior to the completion of all construction work under the Project, the following property interest in the following areas of land* which are to be developed or used as part of or in connection with the Airport as it will be upon completion of the Project, all of which areas are identified on the aforementioned property map designated as Exhibit "A"

Not applicable for this project.

*State the character of property interest in each area and list and identify for each all exceptions, encumbrances, and adverse interests of every kind and nature, including liens, easements, leases, etc. The separate areas of land need only be identified here by the area numbers shown on the property map.

PART III – BUDGET INFORMATION – CONSTRUCTION

SECTION A – GENERAL

1. Federal Domestic Assistance Catalog Number: 20.106
2. Functional or Other Breakout: Airport Improvement Program

SECTION B – CALCULATION OF FEDERAL GRANT

Cost Classification	Use only for revisions		Total Amount Required
	Latest Approved Amount	Adjustment + or (-)	
1. Administration expense	$	$	$ 2,000.00
2. Preliminary expense			
3. Land, structures, right-of-way			
4. Architectural engineering basic fees			13,830.00
5. Other Architectural engineering fees			
6. Project inspection fees			
7. Land development			
8. Relocation Expenses			
9. Relocation payments to Individuals and Businesses			
10. Demolition and removal			
11. Construction and project improvement			157,524.00
12. Equipment			
13. Miscellaneous			
14. Total (Lines 1 through 13)			173,354.00
15. Estimated Income (if applicable)			
16. Net Project Amount (Line 14 minus 15)			173,354.00
17. Less: Ineligible Exclusions			
18. Add: Contingencies			
19. Total Project Amt. (Excluding Rehabilitation Grants)			173,354.00
20. Federal Share requested of Line 19			156,018.00
21. Add Rehabilitation Grants Requested (100 Percent)			
22. Total Federal grant requested (lines 20 & 21)			156,018.00
23. Grantee share			17,336.00
24. Other shares			
25. Total Project (Lines 22, 23 & 24)	$	$	$ 173,354.00

SECTION C – EXCLUSIONS		
Classification	**Ineligible for Participation (1)**	**Excluded From Contingency Provision (2)**
a.	$	$
b.		
c.		
d.		
e.		
f.		
g. **Totals**	$	$

SECTION D – PROPOSED METHOD OF FINANCING NON-FEDERAL SHARE	
27. Grantee Share (Cash)	
a. Securities	$ 17,336.00
b. Mortgages	
c. Appropriations (By Applicant)	
d. Bonds	
e. Tax Levies	
f. Non Cash	
g. Other (Explain)	
h. TOTAL - Grantee share	17,336.00
28. Other Shares	
a. State	
b. Other	
c. Total Other Shares	
29. **TOTAL**	$ 17,336.00

SECTION E – REMARKS

PART IV – PROGRAM NARRATIVE (Attach – See Instructions)

PART IV
PROGRAM NARRATIVE
(Suggested Format)

PROJECT : Procure Snow Removal Equipment

AIRPORT : Hays Regional Airport

1. Objective:

Hays Regional Airport has approximately 894,600 square feet of critical snow removal area. This includes the primary runway, parallel taxiway, general aviation apron, and fire rescue/emergency routes. The Airport is required to remove snowfall from these primary areas within 1 hour for aircraft operations. According to the FAA Snow Removal Equipment worksheet, the Airport is required to have this equipment. The procurement of a new 12-foot runway broom will bring the Airport into compliance with this requirement and make the facilities safer for all users during snowfall events.

2. Benefits Anticipated:

The anticipated benefits of the project are to potentially increase snow removal efficiency at the airport to provide safer pavements for Airport operations during snowfall events.

3. Approach: (See approved Scope of Work in Final Application)

There are no interruptions anticipated at the Airport due to this project.

4. Geographic Location:

The Hays Regional Airport is located in Hays, Kansas.

5. If Applicable, Provide Additional Information:

Organizations participating on the project include:
Sponsor – City of Hays, Kansas
Consultant – Burns & McDonnell Engineering Company
Federal Agency – Federal Aviation Administration.

6. Sponsor's Representative: (include address & telephone number)

Mr. Greg Sund
Director of Public Works
1507 Main Street, P.O. Box 490
Hays, Kansas 67601 (785-628-7350)